MVME162

Embedded Controller

User's Manual

(MVME162/D2)

Notice

While reasonable efforts have been made to assure the accuracy of this document, Motorola, Inc. assumes no liability resulting from any omissions in this document, or from the use of the information obtained therein. Motorola reserves the right to revise this document and to make changes from time to time in the content hereof without obligation of Motorola to notify any person of such revision or changes.

No part of this material may be reproduced or copied in any tangible medium, or stored in a retrieval system, or transmitted in any form, or by any means, radio, electronic, mechanical, photocopying, recording or facsimile, or otherwise, without the prior written permission of Motorola, Inc.

It is possible that this publication may contain reference to, or information about Motorola products (machines and programs), programming, or services that are not announced in your country. Such references or information must not be construed to mean that Motorola intends to announce such Motorola products, programming, or services in your country.

Restricted Rights Legend

If the documentation contained herein is supplied, directly or indirectly, to the U.S. Government, the following notice shall apply unless otherwise agreed to in writing by Motorola, Inc.

Use, duplication, or disclosure by the Government is subject to restrictions as set forth in subparagraph (c)(1)(ii) of the Rights in Technical Data and Computer Software clause at DFARS 252.227-7013.

Motorola, Inc.
Computer Group
2900 South Diablo Way
Tempe, Arizona 85282

Preface

The *MVME162 User's Manual* provides general information, hardware preparation and installation instructions, operating instructions, and a functional description for the MVME162 Embedded Controller.

This manual is intended for anyone who wants to design OEM systems, supply additional capability to an existing compatible system, or work in a lab environment for experimental purposes.

A basic knowledge of computers and digital logic is assumed.

To use this manual, you should be familiar with the publications listed in the *Related Documentation* section in Chapter 1 of this manual.

The computer programs stored in the Read Only Memory of this device contain material copyrighted by Motorola Inc., first published 1990, and may be used only under a license such as the License for Computer Programs (Article 14) contained in Motorola's Terms and Conditions of Sale, Rev. 1/79.



WARNING

This equipment generates, uses, and can radiate radio frequency energy and if not installed and used in accordance with the documentation for this product, may cause interference to radio communications. It has been tested and found to comply with the limits for a Class A Computing Device pursuant to Subpart J of Part 15 of FCC rules, which are designed to provide reasonable protection against such interference when operated in a commercial environment. Operation of this equipment in a residential area is likely to cause interference in which case the user, at the user's own expense, will be required to take whatever measures necessary to correct the interference.

Motorola® and the Motorola symbol are registered trademarks of Motorola, Inc.

Delta Series™, MC68040™, VMEmodule™, VMEsystem™, VMEexec™, and 162Bug™ are trademarks of Motorola, Inc.

IndustryPack™ and IP™ are trademarks of GreenSpring Computers, Inc.

Timekeeper™ and Zeropower™ are trademarks of Thompson Components.

All other products mentioned in this document are trademarks or registered trademarks of their respective holders.

© Copyright Motorola 1993, 1994

All Rights Reserved

Printed in the United States of America

July 1994

Safety Summary
Safety Depends On You

The following general safety precautions must be observed during all phases of operation, service, and repair of this equipment. Failure to comply with these precautions or with specific warnings elsewhere in this manual violates safety standards of design, manufacture, and intended use of the equipment. Motorola, Inc. assumes no liability for the customer's failure to comply with these requirements.

The safety precautions listed below represent warnings of certain dangers of which Motorola is aware. You, as the user of the product, should follow these warnings and all other safety precautions necessary for the safe operation of the equipment in your operating environment.

Ground the Instrument.

To minimize shock hazard, the equipment chassis and enclosure must be connected to an electrical ground. The equipment is supplied with a three-conductor AC power cable. The power cable must either be plugged into an approved three-contact electrical outlet or used with a three-contact to two-contact adapter, with the grounding wire (green) firmly connected to an electrical ground (safety ground) at the power outlet. The power jack and mating plug of the power cable meet International Electrotechnical Commission (IEC) safety standards.

Do Not Operate in an Explosive Atmosphere.

Do not operate the equipment in the presence of flammable gases or fumes. Operation of any electrical equipment in such an environment constitutes a definite safety hazard.

Keep Away From Live Circuits.

Operating personnel must not remove equipment covers. Only Factory Authorized Service Personnel or other qualified maintenance personnel may remove equipment covers for internal subassembly or component replacement or any internal adjustment. Do not replace components with power cable connected. Under certain conditions, dangerous voltages may exist even with the power cable removed. To avoid injuries, always disconnect power and discharge circuits before touching them.

Do Not Service or Adjust Alone.

Do not attempt internal service or adjustment unless another person, capable of rendering first aid and resuscitation, is present.

Use Caution When Exposing or Handling the CRT.

Breakage of the Cathode-Ray Tube (CRT) causes a high-velocity scattering of glass fragments (implosion). To prevent CRT implosion, avoid rough handling or jarring of the equipment. Handling of the CRT should be done only by qualified maintenance personnel using approved safety mask and gloves.

Do Not Substitute Parts or Modify Equipment.

Because of the danger of introducing additional hazards, do not install substitute parts or perform any unauthorized modification of the equipment. Contact your local Motorola representative for service and repair to ensure that safety features are maintained.

Dangerous Procedure Warnings.

Warnings, such as the example below, precede potentially dangerous procedures throughout this manual. Instructions contained in the warnings must be followed. You should also employ all other safety precautions which you deem necessary for the operation of the equipment in your operating environment.



WARNING

Dangerous voltages, capable of causing death, are present in this equipment. Use extreme caution when handling, testing, and adjusting.

Contents

CHAPTER 1 GENERAL INFORMATION

Introduction 1-1
Models 1-1
Features 1-2
Specifications 1-3
- Cooling Requirements 1-4
- Special Considerations for Elevated Temperature Operation 1-4
- FCC Compliance 1-5

General Description 1-6
- Input/Output 1-6
- VMEbus Interface 1-7
- No-VMEbus-Interface Option 1-7
- MCchip 1-7
- Flash Memory and EPROM 1-7
- IndustryPack Modules 1-8
- Optional SCSI Interface 1-8
- Optional LAN Ethernet Transceiver Interface 1-8

Required Equipment 1-8
- MVME162Bug Firmware 1-8
- MVME712 Series Transition Modules 1-9
- Available Software 1-9

Related Documentation 1-10
Support Information 1-11
Manual Terminology 1-12

CHAPTER 2 HARDWARE PREPARATION AND INSTALLATION

Introduction 2-1
Unpacking Instructions 2-1
Hardware Preparation 2-1
SIM Selection 2-2
Removal of Existing SIM 2-4
Installation of New SIM 2-5
System Controller Select Header (J1) 2-5
Synchronous Clock Select Header (J11) for Serial Port 1/Console 2-6
Clock Select Header (J12) for Serial Port 2 2-6
SRAM Battery Backup Source Select Header (J20) 2-7
EPROM Size Select Header (J21) 2-7
General-Purpose Readable Jumpers Header (J22) 2-8
Installation Instructions 2-9
IP Installation on the MVME162 2-9
MVME162 Module Installation 2-10
System Considerations 2-12

CHAPTER 3 OPERATING INSTRUCTIONS

Introduction 3-1
Switches and LEDs 3-1
ABORT Switch (S1) 3-1
RESET Switch (S2) 3-1
Front Panel Indicators (DS1 - DS4) 3-2
Memory Maps 3-3
Local Bus Memory Map 3-3
Normal Address Range 3-3
Detailed I/O Memory Maps 3-7
IPIC Overall Memory Map 3-17
BBRAM, TOD Clock Memory Map 3-21
Interrupt Acknowledge Map 3-24
VMEbus Memory Map 3-24
VMEbus Accesses to the Local Bus 3-24
VMEbus Short I/O Memory Map 3-24
Software Initialization 3-24
Multi-MPU Programming Considerations 3-24
Local Reset Operation 3-25

CHAPTER 4 FUNCTIONAL DESCRIPTION

Introduction 4-1
MVME162 Functional Description 4-1
Data Bus Structure 4-1
MC68040/MC68LC040 MPU 4-2
EPROM and Flash Memory 4-2
SRAM 4-2
About the Battery 4-3
Onboard DRAM 4-4
Battery Backed Up RAM and Clock 4-5
VMEbus Interface and VMEchip2 4-5
I/O Interfaces 4-5
Serial Communications Interface 4-5
IndustryPack (IP) Interfaces 4-8
Ethernet Interface 4-8
SCSI Interface 4-9
SCSI Termination 4-9
Local Resources 4-9
Programmable Tick Timers 4-10
Watchdog Timer 4-10
Software-Programmable Hardware Interrupts 4-10
Local Bus Timeout 4-10
Timing Performance 4-10
Local Bus to DRAM Cycle Times 4-11
EPROM/Flash Cycle Times 4-11
SCSI Transfers 4-11
LAN DMA Transfers 4-12
Remote Status and Control 4-12

APPENDIX A SERIAL INTERCONNECTIONS

Introduction A-1
EIA-232-D Connections A-1
Interface Characteristics A-3
EIA-530 Connections A-4
Interface Characteristics A-6
Proper Grounding A-8

List of Figures

Figure 2-1. MVME162 Switch, Header, Connector, Fuse, and LED Locations 2-3
Figure 2-2. Serial Interface Module, Connector Side 2-4
Figure 2-3. MVME162/MVME712M EIA-232-D Connection Diagram 2-14
Figure 2-4. MVME162/MVME712x EIA-232-D Connection Diagram 2-20
Figure 2-5. MVME162 EIA-530 Connection Diagram 2-24
Figure 4-1. MVME162 Main Module Block Diagram 4-13
Figure 4-2. Parity DRAM Mezzanine Module Block Diagram 4-14

List of Tables

Table 1-1. MVME162 Models....1-1
Table 1-2. MVME162 Specifications....1-3
Table 2-1. Serial Interface Module Part Numbers....2-4
Table 3-1. Local Bus Memory Map....3-4
Table 3-2. Local I/O Devices Memory Map....3-5
Table 3-3. VMEchip2 Memory Map....3-8
Table 3-4. MCchip Register Map....3-14
Table 3-5. Z85230 SCC Register Addresses....3-15
Table 3-6. 82596CA Ethernet LAN Memory Map....3-15
Table 3-7. 53C710 SCSI Memory Map....3-16
Table 3-8. IPIC Overall Memory Map....3-17
Table 3-9. IPIC Memory Map—Control and Status Registers....3-18
Table 3-10. MK48T08 BBRAM/TOD Clock Memory Map....3-19
Table 3-11. BBRAM Configuration Area Memory Map....3-19
Table 3-12. TOD Clock Memory Map....3-20
Table 4-1. DRAM Performance....4-11
Table A-1. EIA-232-D Interconnections....A-2
Table A-2. EIA-232-D Interface Transmitter Characteristics....A-3
Table A-3. EIA-232-D Interface Receiver Characteristics....A-4
Table A-4. Serial Port B EIA-530 Interconnect Signals....A-4
Table A-5. EIA-530 Interface Transmitter Characteristics....A-7
Table A-6. EIA-530 Interface Receiver Characteristics....A-7

GENERAL INFORMATION 1

Introduction

This manual provides general information, hardware preparation and installation instructions, operating instructions, and a functional description of the MVME162 Embedded Controller (referred to as the MVME162 throughout this manual).

Models

The MVME162 is available in several models, which are listed in Table 1-1.

Table 1-1. MVME162 Models

Model	Description
-001	MC68LC040 microprocessor, 1MB DRAM, 512KB SRAM
-002	MC68040 microprocessor, 1MB DRAM, 512KB SRAM
-003	MC68LC040 microprocessor, 1MB DRAM, 512KB SRAM, no VMEbus
-010	MC68LC040 microprocessor, 4MB DRAM, 512KB SRAM
-011	MC68LC040 microprocessor, 4MB DRAM, SCSI, 512KB SRAM
-012	MC68LC040 microprocessor, 4MB DRAM, Ethernet, 512KB SRAM
-013	MC68LC040 microprocessor, 4MB DRAM, SCSI, Ethernet, 512KB SRAM
-014	MC68LC040 microprocessor, 4MB DRAM, Ethernet, no VMEbus
-020	MC68040 microprocessor, 4MB DRAM, 512KB SRAM
-021	MC68040 microprocessor, 4MB DRAM, SCSI, 512KB SRAM
-022	MC68040 microprocessor, 4MB DRAM, Ethernet, 512KB SRAM
-023	MC68040 microprocessor, 4MB DRAM, SCSI, Ethernet, 512KB SRAM
-026	MC68040 microprocessor, 4MB DRAM, Ethernet, no VMEbus
-030	MC68LC040 microprocessor, 8MB DRAM, 512KB SRAM
-031	MC68LC040 microprocessor, 8MB DRAM, SCSI, 512KB SRAM
-032	MC68LC040 microprocessor, 8MB DRAM, Ethernet, 512KB SRAM
-033	MC68LC040 microprocessor, 8MB DRAM, SCSI, Ethernet, 512KB SRAM
-040	MC68040 microprocessor, 8MB DRAM, 512KB SRAM
-041	MC68040 microprocessor, 8MB DRAM, SCSI, 512KB SRAM
-042	MC68040 microprocessor, 8MB DRAM, Ethernet, 512KB SRAM
-043	MC68040 microprocessor, 8MB DRAM, SCSI, Ethernet, 512KB SRAM

Features

Features of the MVME162 include:

- ❏ 25MHz 32-bit Microprocessor: either an MC68LC040 Enhanced 32-bit Microprocessor with 8KB of cache and MMU, or an optional 25MHz MC68040 32-bit Microprocessor with 8KB of cache, MMU, and FPU
- ❏ 1MB, 4MB, or 8MB of shared Dynamic Random Access Memory (DRAM) with programmable parity
- ❏ 512KB of Static Random Access Memory (SRAM) with battery backup
- ❏ One JEDEC standard 32-pin PLCC EPROM socket (EPROMs may be shipped separately from the MVME162)
- ❏ 1MB Flash memory: either one Intel 28F008SA (for older boards) or four Intel 28F020s (for newer boards)
- ❏ Four 32-bit programmable timers and programmable Watchdog Timer (MCchip)
- ❏ Two 32-bit programmable timers and programmable Watchdog Timer (optional VMEchip2)
- ❏ 8K by 8 Non-Volatile Random Access Memory (NVRAM) and Time of Day (TOD) clock with battery backup (Thompson MK48T08)
- ❏ Input/Output
  - – Two serial ports (one EIA-232-D DCE; one EIA-232-D or EIA-530 DCE/DTE)
  - – Serial port controller (Zilog Z85230)
  - – Optional Small Computer Systems Interface (SCSI) bus interface with 32-bit local bus burst Direct Memory Access (DMA) (NCR 53C710 controller)
  - – Optional LAN Ethernet transceiver interface with 32-bit local bus DMA (Intel 82596CA controller)
  - – Four MVIP IndustryPack interfaces
- ❏ VMEbus interface (VMEchip2)—non-VMEbus version optional
  - – VMEbus system controller functions
  - – VMEbus interface to local bus (A24/A32, D8/D16/D32 (D8/D16/D32/D64BLT) (BLT = Block Transfer)
  - – Local bus to VMEbus interface (A16/A24/A32, D8/D16/D32)
  - – VMEbus interrupter

- VMEbus interrupt handler
- Global CSR for interprocessor communications
- DMA for fast local memory-VMEbus transfers (A16 / A24 / A32, D16 / D32[D16 / D32 / D64BLT])

❑ Switches and Light-Emitting Diodes (LEDs)

- Two pushbutton switches (ABORT and RESET)
- Eight LEDs (FAIL, STAT, RUN, SCON, LAN, FUSE, SCSI, and VME)

Specifications

Table 1-2, *MVME162 Specifications*, lists the specifications for an MVME162 without IndustryPacks. The subsequent sections detail cooling requirements and FCC compliance.

Table 1-2. MVME162 Specifications

Characteristics	Specifications
Power requirements (with PROM; without IPs)	+5V (± 5%), 3.5 A typical, 4.5 A maximum +12 Vdc (± 5%), 100 mA maximum -12 Vdc (± 5%), 100 mA maximum
Operating temperature	0° to 70° C exit air with forced air cooling (see NOTE)
Storage temperature	-40° to +85° C
Relative humidity	5% to 90% (noncondensing)
Physical dimensions	Double-high VMEboard
PC board with mezzanine module only	
Height	9.2 inches (233 mm)
Depth	6.3 inches (160 mm)
Thickness	0.66 inch (17 mm)
PC board with connectors and front panel	
Height	10.3 inches (262 mm)
Depth	7.4 inches (188 mm)
Thickness	0.80 inch (20.32 mm)

Note **Refer to the following sections on *Cooling Requirements* and *Special Considerations for Elevated Temperature Operation.***

Cooling Requirements

The Motorola MVME162 Embedded Controller is specified, designed, and tested to operate reliably with an incoming air temperature range from 0° to 55° C (32° to 131° F) with forced air cooling at a velocity typically achievable by using a 100 CFM axial fan. Temperature qualification is performed in a standard Motorola VMEsystem 3000 chassis. Twenty-five watt load boards are inserted in two card slots, one on each side, adjacent to the board under test, to simulate a high power density system configuration. An assembly of three axial fans, rated at 100 CFM per fan, is placed directly under the VME card cage. The incoming air temperature is measured between the fan assembly and the card cage, where the incoming airstream first encounters the controller under test. Test software is executed as the controller is subjected to ambient temperature variations. Case temperatures of critical, high power density integrated circuits are monitored to ensure component vendors specifications are not exceeded.

While the exact amount of airflow required for cooling depends on the ambient air temperature and the type, number, and location of boards and other heat sources, adequate cooling can usually be achieved with 10 CFM and 490 LFM flowing over the controller. Less airflow is required to cool the controller in environments having lower maximum ambients. Under more favorable thermal conditions, it may be possible to operate the controller reliably at higher than 55° C with increased airflow. It is important to note that there are several factors, in addition to the rated CFM of the air mover, which determine the actual volume and speed of air flowing over the controller.

Special Considerations for Elevated Temperature Operation

The following information is for users whose applications for the MVME162 may subject it to high temperatures.

The MVME162 uses commercial grade devices. Therefore, it can operate in an environment with ambient air temperatures from 0° C to 70° C. Several factors influence the ambient temperature seen by components on the MVME162. Among them are inlet air temperature; air flow characteristics; number, types, and locations of IndustryPack (IP) modules; power dissipation of adjacent boards in the system, etc.

A temperature profile of the MVME162-023 was developed in an MVME945 12-slot VME chassis. This board was loaded with one GreenSpring IP-Dual P/T module (position a) and three GreenSpring IP-488 modules (positions b, c, and d). One twenty-five-watt load board was installed adjacent to each side of the board under test. The exit air velocity was approximately 200 LFM

between the MVME162 and the IP-Dual P/T module. Under these conditions, a 10° C rise between the inlet and exit air was observed. At 70° C exit air temperature (60° C inlet air), the junction temperatures of devices on the MVME162 were calculated (from the measured case temperatures) and did not exceed 100° C.

Caution **For elevated-temperature operation, the user must perform similar measurements and calculations to determine what operating margin exists in a specific environment.**

The following are some steps that the user can take to help make elevated-temperature operation possible:

1. Position the MVME162 board in the chassis for maximum airflow over the component side of the board.
2. Avoid placing boards with high power dissipation adjacent to the MVME162.
3. Use low-power IP modules only. The preferred locations for IP modules are position a (J2 and J3) and position d (J18 and J19).

FCC Compliance

The MVME162 was tested *without* IndustryPacks in an FCC-compliant chassis and meets the requirements for Class A equipment. FCC compliance was achieved under the following conditions:

1. Shielded cables on all external I/O ports.
2. Cable shields connected to earth ground via metal shell connectors bonded to a conductive module front panel.
3. Conductive chassis rails connected to earth ground. This provides the path for connecting shields to earth ground.
4. Front panel screws properly tightened.

For minimum RF emissions, it is essential that the conditions above be implemented. Failure to do so could compromise the FCC compliance of the equipment containing the module.

General Description

The MVME162 is a double-high VMEmodule equipped with an MC68LC040 or optional MC68040 microprocessor. (The MC68040 microprocessor has a floating-point coprocessor; the MC68LC040 does not.)

The MVME162 has 1MB, 4MB, or 8MB of parity-protected DRAM; 512KB SRAM (with battery backup); a TOD clock (with battery backup); an optional LAN Ethernet transceiver interface with DMA, two serial ports (EIA-232-D and EIA-232-D / EIA-530); six tick timers with watchdog timer(s); optional SCSI bus interface with DMA; VMEbus interface (local bus to VMEbus / VMEbus to local bus, with A16 / A24 / A32, D8 / D16 / D32 bus widths and a VMEbus system controller).

Input/Output

Input / Output (I / O) signals are routed through backplane connector P2. A P2 adapter board or LCP2 adapter board routes the signals and grounds from connector P2 to an MVME712 series transition module (MVME712-12, MVME712-13, MVME712A, MVME712AM, or MVME712M). The transition module routes the signals to the appropriate configuration headers and industry-standard connectors. Refer to the *MVME712-12, MVME712-13, MVME712A, MVME712AM, and MVME712B Transition Modules and LCP2 Adapter Board User's Manual* or the *MVME712M Transition Module and P2 Adapter Board User's Manual* for more information.

Notes

When used with the MVME162, only serial ports 2 and 4 on the MVME712 are available for use. Serial ports 1 and 3 and the printer port are not connected to any MVME162 circuits and should not be used.

An I/O device may be connected to serial port 1 (or 2) on the MVME162 *or* to serial port 2 (or 4) on the MVME712, but not both. (That is, if an I/O device is connected to MVME162 port 1, no other I/O device should be connected to MVME712 port 2; they are functionally the same port.)

VMEbus Interface

The optional VMEchip2 ASIC is the VMEbus interface for the MVME162. (This option is a factory build and cannot be added in the field.) VMEchip2 features include:

- ❏ Two programmable 32-bit tick timers
- ❏ A programmable watchdog timer
- ❏ Programmable map decoders for the master and slave interfaces
- ❏ A VMEbus to/from local bus DMA controller
- ❏ A VMEbus to/from local bus non-DMA programmed access interface
- ❏ A VMEbus interrupter
- ❏ A VMEbus system controller
- ❏ A VMEbus interrupt handler
- ❏ A VMEbus requester

Processor-to-VMEbus transfers can be D8, D16, or D32. VMEchip2 DMA transfers to the VMEbus, however, can be D16, D32, D16/BLT, D32/BLT, or D64/MBLT.

No-VMEbus-Interface Option

If desired, the MVME162 can function as an embedded controller without a VMEbus interface (i.e., without the optional VMEchip2). Contact your local Motorola sales office for ordering information.

MCchip

The Memory Controller (MCchip) ASIC provides four 32-bit programmable tick timers and an interface to the LAN chip, SCSI chip, serial port chip, BBRAM, PROM/Flash, SRAM, DRAM, reset control, watchdog timers, access timers, and interrupter logic.

Flash Memory and EPROM

The MVME162 is equipped with 1MB of Flash memory and an EPROM socket ready for the installation of the EPROM, which may be ordered separately. Flash memory is either a single device organized in a 1Mbit x 8 configuration or four devices organized in a 256Kbit x 8 configuration. The EPROM location is a standard JEDEC 32-pin PLCC capable of four Mbit densities (128 Kbit x 8;

256 Kbit x 8; 512 Kbit x 8; 1 Mbit x 8) organized as a 512Kbit x 8 device. A jumper allows reset code to be fetched either from Flash memory or from the EPROM.

IndustryPack Modules

Up to four IndustryPack (IP) modules may be installed on the MVME162. The interface between the IPs and MVME162 is the IndustryPack Interface Controller (IPIC) ASIC. Access to the IPs is provided by four 3M connectors located behind the MVME162 front panel.

Optional SCSI Interface

An NCR 53C710 coprocessor provides the SCSI interface for the MVME162.

Optional LAN Ethernet Transceiver Interface

An Intel 82596CA controller provides the LAN Ethernet transceiver interface for the MVME162.

Required Equipment

The following equipment is required to complete an MVME162 system:

- ❏ System console terminal
- ❏ Disk drives and controllers
- ❏ Operating system
- ❏ MVME712 series transition module (MVME712-12, MVME712-13, MVME712A, MVME712AM, MVME712B, or MVME712M); P2 Adapter Board or LCP2 Adapter Board; and cable

Note **The MVME712B is an optional device used with MVME712-12, MVME712-13, MVME712A, and MVME712AM modules only.**

MVME162Bug Firmware

The 162Bug package, MVME162BUG, is a powerful evaluation and debugging tool for systems built around the MVME162 CISC-based microcomputers. Facilities are available for loading and executing user programs under complete operator control for system evaluation. 162Bug includes commands for display and modification of memory, breakpoint and tracing capabilities, a powerful assembler / disassembler useful for patching programs, and a self-

test at power-up feature which verifies the integrity of the system. Various 162Bug routines that handle I/O, data conversion, and string functions are available to user programs through the TRAP #15 system calls.

Note **MVME162Bug occupies the first half (512KB) of Flash memory.**

MVME712 Series Transition Modules

The MVME712 series transition modules provide an interface between the MVME162 and peripheral devices such as EIA-232-D serial devices, SCSI devices, and LAN Ethernet devices. A P2 Adapter Board or LCP2 Adapter Board and cable are required.

Caution **Connect peripheral devices to MVME712 serial ports 2 and 4 only. (Serial port 2 is the terminal or bug interface.) Do not connect peripheral devices to serial ports 1 and 3, or to the printer port.**

An I/O device may be connected to serial port 1 (or 2) on the MVME162 *or* to serial port 2 (or 4) on the MVME712, but not to both ports. (That is, if an I/O device is connected to MVME162 port 1, no other I/O device should be connected to MVME712 port 2; they are functionally the same port.)

Available Software

Available software for the MVME162 includes the on-board debugger/monitor firmware, VMEexec driver packages for various IndustryPack modules, and numerous third-party applications for MC680*x*0-based systems. Contact your local Motorola sales office for more information.

Related Documentation

The following publications are applicable to the MVME162 and may provide additional helpful information. If not shipped with this product, they may be purchased by contacting your local Motorola sales office. Non-Motorola documents may be purchased from the sources listed.

Document Title	Motorola Publication Number
M68040 Microprocessors User's Manual	M68040UM
MVME162 Embedded Controller Support Information (Refer to the *Support Information* section in this chapter)	SIMVME162
MVME162Bug Debugging Package User's Manual	MVME162BUG
Debugging Package for Motorola 68K CISC CPUs User's Manual, Parts 1 and 2	68KBUG1/2
Single Board Computers SCSI Software User's Manual	SBCSCSI
MVME162 Embedded Controller Programmer's Reference Guide	MVME162PG
MVME712-12, MVME712-13, MVME712A, MVME712AM, and MVME712B Transition Modules and LCP2 Adapter Board User's Manual	MVME712A
MVME712M Transition Module and P2 Adapter Board User's Manual	MVME712M
MVME1x7 Data Sheet Package (for use with the MVME162[LX] and the MVME166/MVME167/MVME187)	68-1X7DS

Notes

Although not shown in the above list, each Motorola Computer Group manual publication number is suffixed with characters which represent the revision level of the document, such as "/D2" (the second revision of a manual); a supplement bears the same number as a manual but has a suffix such as "/D2A1" (the first supplement to the second edition of the manual).

The *MVME1x7 Data Sheet Package* is composed of vendor-supplied data sheets and manuals for the peripheral controllers used on the MVME162 and other boards.

The following publications are available from the sources indicated.

Versatile Backplane Bus: VMEbus, ANSI/IEEE Std 1014-1987, The Institute of Electrical and Electronics Engineers, Inc., 345 East 47th Street, New York, NY 10017 (VMEbus Specification). This is also available as *Microprocessor system bus for 1 to 4 byte data, IEC 821 BUS*, Bureau Central de la Commission Electrotechnique Internationale; 3, rue de Varembé, Geneva, Switzerland.

ANSI Small Computer System Interface-2 (SCSI-2), Draft Document X3.131-198X, Revision 10c; Global Engineering Documents, P.O. Box 19539, Irvine, CA 92714.

IndustryPack Logic Interface Specification, Revision 1.0; GreenSpring Computers, Inc., 1204 O'Brien Drive, Menlo Park, CA 94025.

82596CA Local Area Network Coprocessor data sheet, order number 290218; and *82596 User's Manual*, order number 296853; Intel Corporation, Literature Sales, P.O. Box 58130, Santa Clara, CA 95052-8130.

NCR 53C710 SCSI I/O Processor Data Manual, order number NCR53C710DM; and *NCR 53C710 SCSI I/O Processor Programmer's Guide*, order number NCR53C710PG; NCR Corporation, Microelectronics Products Division, Colorado Springs, CO.

MK48T08(B) Timekeeper™ and 8Kx8 Zeropower™ RAM data sheet in *Static RAMs Databook*, Order Code DBSRAM71; SGS-THOMPSON Microelectronics Group; North & South American Marketing Headquarters, 1000 East Bell Road, Phoenix, AZ 85022-2699.

Z85230 Serial Communications Controller data sheet, Zilog Inc., 210 Hacienda Ave., Campbell, CA 95008-6609.

28F008SA Flash Memory Data Sheet, Order Number 290435-001; Intel Literature Sales, P.O. Box 7641, Mt. Prospect, IL 60056-7641.

28F020 Flash Memory Data Sheet, Order Number 290245-003; Intel Literature Sales, P.O. Box 7641, Mt. Prospect, IL 60056-7641.

Support Information

You can obtain connector interconnect signal information, parts lists, and schematics for the MVME162 free of charge by contacting your local Motorola sales office.

Manual Terminology

Throughout this manual, a convention is used which precedes data and address parameters by a character identifying the numeric format as follows:

$	dollar	specifies a hexadecimal character
%	percent	specifies a binary number
&	ampersand	specifies a decimal number

Unless otherwise specified, all address references are in hexadecimal.

An asterisk (*) following the signal name for signals which are level-significant denotes that the signal is true or valid when the signal is low.

An asterisk (*) following the signal name for signals which are edge-significant denotes that the actions initiated by that signal occur on high-to-low transition.

In this manual, *assertion* and *negation* are used to specify forcing a signal to a particular state. In particular, *assertion* and *assert* refer to a signal that is active or true; *negation* and *negate* indicate a signal that is inactive or false. These terms are used independently of the voltage level (high or low) that they represent.

In this manual, *MVME712 series transition module* refers generically to the MVME712-12, MVME712-13, MVME712A, MVME712AM, or MVME712M. *MVME712x transition module* refers to the closely related MVME712-12, MVME712-13, MVME712A, or MVME712AM (not to the MVME712M). References to a specific module use the complete designation of that module.

Data and address sizes are defined as follows:

- A byte is eight bits, numbered 0 through 7, with bit 0 being the least significant.
- A word is 16 bits, numbered 0 through 15, with bit 0 being the least significant.
- A longword is 32 bits, numbered 0 through 31, with bit 0 being the least significant.

HARDWARE PREPARATION AND INSTALLATION 2

Introduction

This chapter provides unpacking instructions, hardware preparation guidelines, and installation instructions for the MVME162 Embedded Controller. Hardware preparation for the MVME712 series transition modules is described in separate manuals; refer to the *Related Documentation* section in Chapter 1.

Unpacking Instructions

Note **If the shipping carton is damaged upon receipt, request that the carrier's agent be present during the unpacking and inspection of the equipment.**

Unpack the equipment from the shipping carton. Refer to the packing list and verify that all items are present. Save the packing material for storing and reshipping of equipment.

Caution **Avoid touching areas of integrated circuitry; static discharge can damage circuits.**

Hardware Preparation

To produce the desired configuration and ensure proper operation of the MVME162, you may need to carry out certain modifications before installing the module.

The MVME162 provides software control over most options: by setting bits in control registers after installing the MVME162 in a system, you can modify its configuration. (The MVME162 registers are described in Chapter 4, and / or in the *MVME162 Embedded Controller Programmer's Reference Guide* as listed in *Related Documentation* in Chapter 1.)

Some options, however, are not software-programmable. Such options are controlled by manual installation or removal of header jumpers or interface modules.

Figure 2-1 illustrates the placement of the switches, jumper headers, connectors, and LED indicators on the MVME162. Manually configurable items include:

- ❏ SIM selection for serial port B configuration (J10)
- ❏ System controller selection (J1)
- ❏ Synchronous clock selection (J11) for Serial Port 1/Console
- ❏ Synchronous clock selection (J12) for Serial Port 2
- ❏ SRAM backup power source selection (J20)
- ❏ EPROM size selection (J21)
- ❏ General-purpose readable register configuration (J22)

The MVME162 has been factory tested and is shipped with the configurations described in the following sections. The MVME162's required and factory-installed Debug Monitor, MVME162Bug (162Bug), operates with those factory settings.

SIM Selection

Port B of the MVME162's Z85230 serial communications controller is configurable via a serial interface module (SIM) which is installed at connector J10 on the MVME162 board. Four serial interface modules are available:

- ❏ EIA-232-D (DCE and DTE)
- ❏ EIA-530 (DCE and DTE)

You can change Port B from an EIA-232-D to an EIA-530 interface (or vice-versa) by mounting the appropriate serial interface module. Port B is routed (via the SIM at J10) to the 25-pin DB25 front panel connector marked SERIAL PORT 2.

For the location of SIM connector J10 on the MVME162, refer to Figure 2-1. Figure 2-2 illustrates the secondary side (bottom) of a serial interface module, showing the J1 connector which plugs into SIM connector J10 on the MVME162. Figure 2-3 (sheets 3-6), Figure 2-4 (sheets 3-4), and Figure 2-5 illustrate the configurations available for Port B.

For the part numbers of the serial interface modules, refer to Table 2-1. The part numbers are ordinarily printed on the primary side (top) of the SIMs, but may be found on the secondary side in some versions.

If you need to replace an existing serial interface module with a SIM of another type, go to *Removal of Existing SIM* below. If there is no SIM on the main board, skip to *Installation of New SIM*.

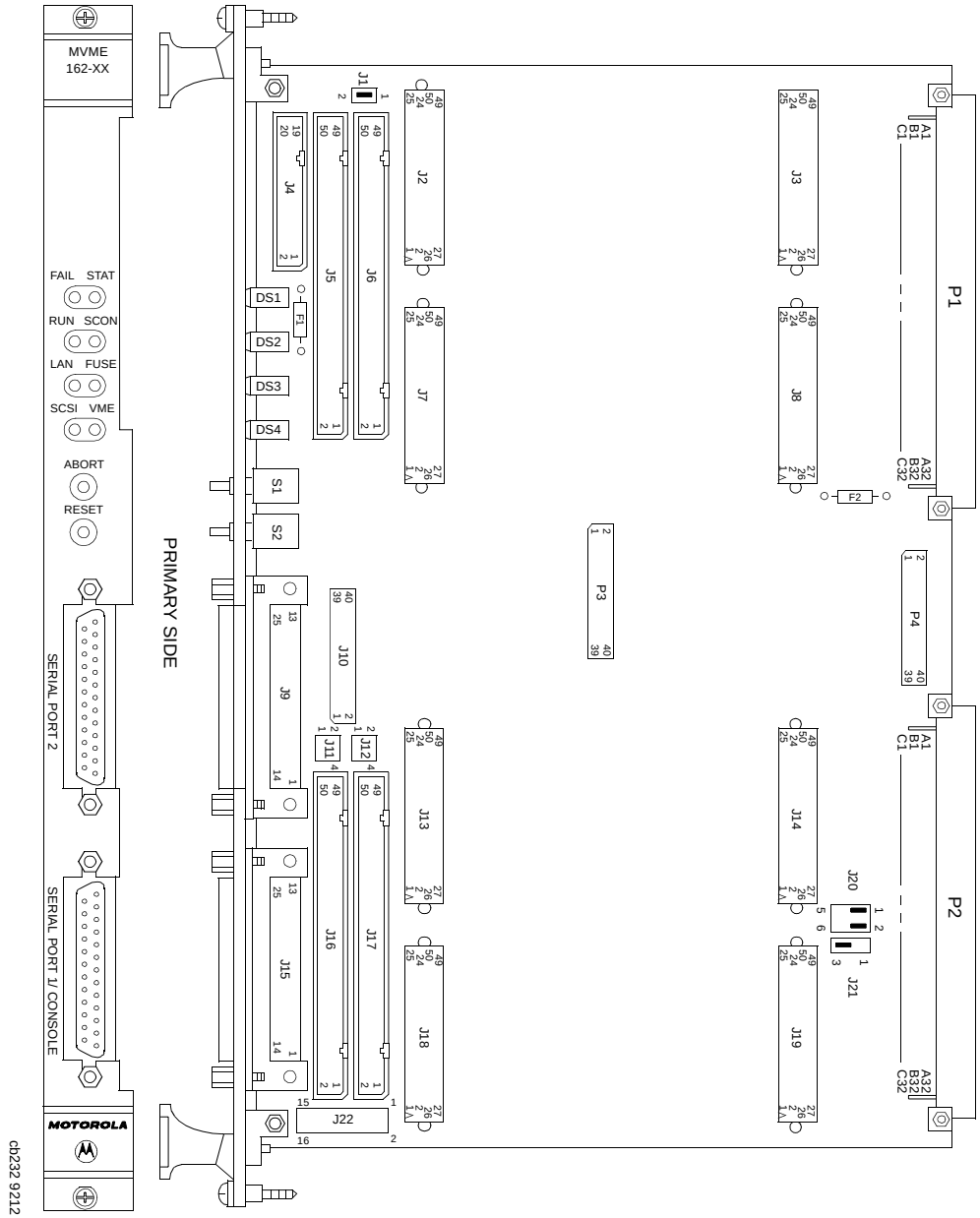

Figure 2-1. MVME162 Switch, Header, Connector, Fuse, and LED Locations

Table 2-1. Serial Interface Module Part Numbers

EIA Standard	Configuration	Part Number	Model Number
EIA-232-D	DTE	01-W3846B	SIM05
	DCE	01-W3865B	SIM06
EIA-530	DTE	01-W3868B	SIM07
	DCE	01-W3867B	SIM08

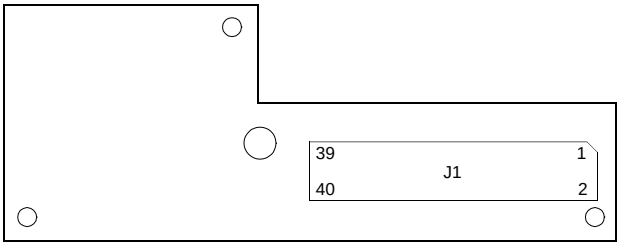

Figure 2-2. Serial Interface Module, Connector Side

Removal of Existing SIM

1. Each serial interface module is retained by two 4-40 x 3/16 ” Phillips-head screws in opposite corners. Remove the two screws and store them in a safe place for later use.
2. Grasp opposite sides of the SIM and gently lift straight up.

Caution **Avoid lifting the SIM by one side only, as the connector can be damaged on the SIM or the main board.**

3. Place the SIM in a static-safe container for possible reuse.

Installation of New SIM

1. Observe the orientation of the connector keys on SIM connector J1 and MVME162 connector J10. Turn the SIM so that the keys line up and place it gently on connector J10, aligning the mounting holes at the SIM corners with the matching standoffs on the MVME162.
2. Gently press the top of the SIM to seat it on the connector. If the SIM does not seat with gentle pressure, recheck the orientation. If the SIM connector is oriented incorrectly, the mounting holes will not line up with the standoffs.

Caution **Do not attempt to force the SIM on if it is oriented incorrectly.**

3. Place the two 4-40 x 3/16" Phillips-head screws that you previously removed (or that were supplied with the new SIM) into the two opposite-corner mounting holes. Screw them into the standoffs but do not overtighten them.

The signal relationships and signal connections in the various serial configurations available for ports A and B are illustrated in Figures 2-3, 2-4, and 2-5.

System Controller Select Header (J1)

The MVME162 is factory-configured as a VMEbus system controller (i.e., a jumper is installed across pins 1 and 2 of header J1). Remove the J1 jumper if the MVME162 is not to be the system controller. Note that when the MVME162 is functioning as system controller, the SCON LED is turned on.

Note **For MVME162s without the optional VMEbus interface (i.e., no VMEchip2), the jumper may be installed or removed without affecting normal operation.**



System Controller (factory configuration)

Not System Controller

Synchronous Clock Select Header (J11) for Serial Port 1/Console

The MVME162 is shipped from the factory with the SERIAL PORT 1/CONSOLE header configured for asynchronous communications (i.e., jumpers removed). To select synchronous communications for the SERIAL PORT 1/CONSOLE connection, install jumpers across pins 1 and 2 and pins 3 and 4.

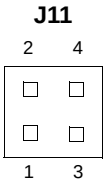

Internal Clock (factory configuration)

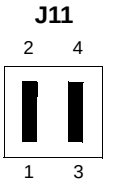

External Clock

Clock Select Header (J12) for Serial Port 2

The MVME162 is shipped from the factory with the SERIAL PORT 2 header configured for asynchronous communications (i.e., jumpers removed). To select synchronous communications for the SERIAL PORT 2 connection, install jumpers across pins 1 and 2 and pins 3 and 4.

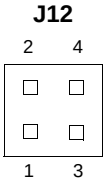

Internal Clock (factory configuration)

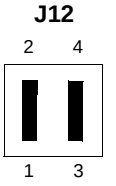

External Clock

SRAM Battery Backup Source Select Header (J20)

The MVME162 is factory-configured to use VMEbus +5V standby power as a backup power source for the SRAM (i.e., jumpers are installed across pins 1 and 3 and 2 and 4). To select the onboard battery as the backup power source, install the jumpers across pins 3 and 5 and 4 and 6.

Note **For MVME162s without the optional VMEbus interface (i.e., without the VMEchip2 ASIC), you must select the onboard battery as the backup power source.**

Caution **Removing all jumpers may temporarily disable the SRAM. Do not remove all jumpers from J20, except for storage.**

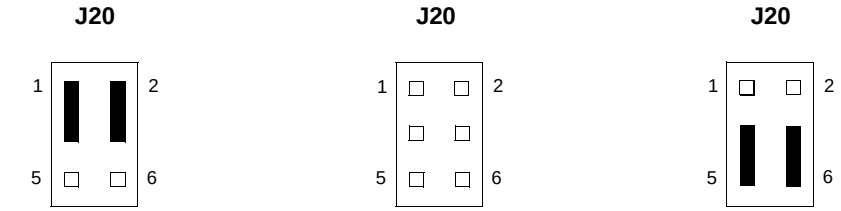

VMEbus +5V STBY (Factory configuration)

Backup Power Disabled (For storage only)

Onboard Battery

EPROM Size Select Header (J21)

The MVME162 is factory-configured for a 4Mbit EPROM (i.e., a jumper is installed across pins 2 and 3). This is the only size currently available; if a larger EPROM becomes available, this jumper will allow it to be selected.

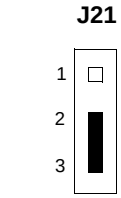

4Mbit EPROM (Factory configuration)

2

General-Purpose Readable Jumpers Header (J22)

Header J22 provides eight readable jumpers. These jumpers can be read as a register (at $FFF4202D) in the MCchip LCSR (local control / status register). The bit values are read as a zero when the jumper is installed, and as a one when the jumper is removed.

If the MVME162BUG firmware is installed, four jumpers are user-definable (pins 1-2, 3-4, 5-6, 7-8). If the MVME162BUG firmware is not installed, seven jumpers are user-definable (pins 1-2, 3-4, 5-6, 7-8, 11-12, 13-14, 15-16).

Note **Pins 9-10 (GPIO3) are reserved to select either the Flash memory map (jumper installed) or the EPROM memory map (jumper removed). They are not user-definable.**

The MVME162 is shipped from the factory with J22 set to all zeros (jumpers on all pins).

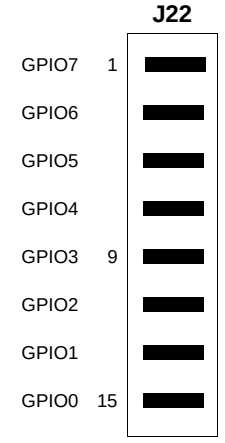

	162BUG INSTALLED	USER CODE INSTALLED
GPIO7	USER-DEFINABLE	USER-DEFINABLE
GPIO6	USER-DEFINABLE	USER-DEFINABLE
GPIO5	USER-DEFINABLE	USER-DEFINABLE
GPIO4	USER-DEFINABLE	USER-DEFINABLE
GPIO3	IN=FLASH; OUT=EPROM	IN=FLASH; OUT=EPROM
GPIO2	REFER TO 162BUG MANUAL	USER-DEFINABLE
GPIO1	REFER TO 162BUG MANUAL	USER-DEFINABLE
GPIO0	REFER TO 162BUG MANUAL	USER-DEFINABLE

EPROMs Selected (factory configuration)

Installation Instructions

The following sections discuss the installation of IndustryPacks (IPs) on the MVME162, the installation of the MVME162 into a VME chassis, and the system considerations relevant to the installation. Before installing IndustryPacks, ensure that the serial ports and all header jumpers are configured as desired.

IP Installation on the MVME162

Up to four IndustryPack (IP) modules may be installed on the MVME162. Install the IPs on the MVME162 as follows:

1. Each IP has two 50-pin connectors that plug into two corresponding 50-pin connectors on the MVME162: J2 / J3, J7 / J8, J13 / J14, J18 / J19. See Figure 2-1 for the MVME162 connector locations.
   - Orient the IP(s) so that the tapered connector shells mate properly. Plug IP_a into connectors J2 and J3; plug IP_b into J7 and J8. Plug IP_c into J13 and J14; plug IP_d into J18 and J19. If a double-sized IP is used, plug IP_ab into J2, J3, J7, and J8; plug IP_cd into J13, J14, J18, and J19.
2. Four additional 50-pin connectors (J6, J5, J17, and J16) are provided behind the MVME162 front panel for external cabling connections to the IP modules. There is a one-to-one correspondence between the signals on the cabling connectors and the signals on the associated IP connectors (i.e., J6 has the same IP_a signals as J2; J5 has the same IP_b signals as J7; J17 has the same IP_c signals as J13; and J16 has the same IP_d signals as J18.
   - Connect user-supplied 50-pin cables to J6, J5, J17, and J16 as needed. Because of the varying requirements for each different kind of IP, Motorola does not supply these cables.
   - Bring the IP cables out the narrow slots in the MVME162 front panel and attach them to the appropriate external equipment, depending on the nature of the particular IP(s).

MVME162 Module Installation

With EPROM and IndustryPacks installed and headers properly configured, proceed as follows to install the MVME162 in the VME chassis:

1. Turn all equipment power OFF and disconnect the power cable from the AC power source.

Caution **Inserting or removing modules while power is applied could result in damage to module components.**



WARNING **Dangerous voltages, capable of causing death, are present in this equipment. Use extreme caution when handling, testing, and adjusting.**

2. Remove the chassis cover as instructed in the user's manual for the equipment.
3. Remove the filler panel from the card slot where you are going to install the MVME162.
   - If you intend to use the MVME162 as system controller, it must occupy the leftmost card slot (slot 1). The system controller must be in slot 1 to correctly initiate the bus-grant daisy-chain and to ensure proper operation of the IACK daisy-chain driver.
   - If you do not intend to use the MVME162 as system controller, it can occupy any unused double-height card slot.
4. Slide the MVME162 into the selected card slot. Be sure the module is seated properly in the P1 and P2 connectors on the backplane. Do not damage or bend connector pins.
5. Secure the MVME162 in the chassis with the screws provided, making good contact with the transverse mounting rails to minimize RF emissions.
6. Install the MVME712 series transition module in the front or the rear of the VME chassis. (To install an MVME712M, which has a double-wide front panel, you may need to shift other modules in the chassis.)
7. On the chassis backplane, remove the INTERRUPT ACKNOWLEDGE (IACK) and BUS GRANT (BG) jumpers from the header for the card slot occupied by the MVME162.

8. Connect the P2 Adapter Board or LCP2 Adapter Board and cable(s) to MVME162 backplane connector P2. This provides a connection point for terminals or other peripherals at the EIA-232-D serial ports, SCSI ports, and LAN Ethernet port.

   For information on installing the P2 or LCP2 Adapter Board and the MVME712 series transition module(s), refer to the manuals listed in *Related Documentation* in Chapter 1 (the *MVME162 Embedded Controller Programmer's Reference Guide* provides some connection diagrams).

Note **If you intend to use the MVME162 with Port B in an EIA-530 configuration, do not install the P2 or LCP2 Adapter Board and the MVME712 series transition module. They are incompatible with the EIA-530 interface (refer to *MVME162 Serial Port 2* in Chapter 4, *Functional Description*).**

9. Connect the appropriate cable(s) to the panel connectors for the EIA-232-D serial ports, SCSI port, and LAN Ethernet port.
   – Note that some cables are not provided with the MVME712 series module and must be made or purchased by the user. (Motorola recommends shielded cable for all peripheral connections to minimize radiation.)
10. Connect the peripheral(s) to the cable(s). Appendix A supplies detailed information on the EIA-232-D signals supported. Appendix B describes the Ethernet LAN (*Local Area Network*) port connections. Appendix C describes the SCSI (*Small Computer System Interface*) I/O bus connections.
11. Install any other required VMEmodules in the system.
12. Replace the chassis cover.
13. Connect the power cable to the AC power source and turn the equipment power ON.

System Considerations

The MVME162 draws power from VMEbus backplane connectors P1 and P2. P2 is also used for the upper 16 bits of data in 32-bit transfers, and for the upper 8 address lines in extended addressing mode. The MVME162 may not function properly without its main board connected to VMEbus backplane connectors P1 and P2.

Whether the MVME162 operates as a VMEbus master or as a VMEbus slave, it is configured for 32 bits of address and 32 bits of data (A32/D32). However, it handles A16 or A24 devices in the address ranges indicated in Chapter 3. D8 and/or D16 devices in the system must be handled by the MC68040/MC68LC040 software. Refer to the memory maps in Chapter 3.

The MVME162 contains shared onboard DRAM whose base address is software-selectable. Both the onboard processor and offboard VMEbus devices see this local DRAM at base physical address $00000000, as programmed by the MVME162Bug firmware. This may be changed via software to any other base address. Refer to the *MVME162 Embedded Controller Programmer's Reference Guide* for more information.

If the MVME162 tries to access offboard resources in a nonexistent location and is not system controller, and if the system does not have a global bus timeout, the MVME162 waits forever for the VMEbus cycle to complete. This will cause the system to lock up. There is only one situation in which the system might lack this global bus timeout: when the MVME162 is not the system controller and there is no global bus timeout elsewhere in the system.

Multiple MVME162s may be installed in a single VME chassis. In general, hardware multiprocessor features are supported.

Note **If you are installing multiple MVME162s in an MVME945 chassis, do not install an MVME162 in slot 12. The height of the IP modules may cause clearance difficulties in that slot position.**

Other MPUs on the VMEbus can interrupt, disable, communicate with, and determine the operational status of the processor(s). One register of the GCSR (global control/status register) set includes four bits that function as location monitors to allow one MVME162 processor to broadcast a signal to any other MVME162 processors. All eight registers are accessible from any local processor as well as from the VMEbus.

The MVME162 provides +5 Vdc power to the remote LED / switch connector (J4) through a 1A fuse (F1) located near J4. Connector J4 is the interface for a remote control and indicator panel. If none of the LEDs light and the ABORT and RESET switches do not operate, check fuse F1.

The MVME162 provides +12 Vdc power to the Ethernet transceiver interface through a 1A fuse (F2) located near diode CR1. The FUSE LED lights to indicate that +12 Vdc is available. When the MVME712M module is used, the yellow DS1 LED on the MVME712M illuminates when LAN power is available, which indicates that the fuse is good. If the Ethernet transceiver fails to operate, check fuse F2.

The MVME162 provides SCSI terminator power through a 1A fuse (F1) located on the P2 Adapter Board or LCP2 Adapter Board. If the fuse is blown, the SCSI device(s) may function erratically or not at all. When the P2 Adapter Board is used with an MVME712M and the SCSI bus is connected to the MVME712M, the green DS2 LED on the MVME712M front panel illuminates when SCSI terminator power is available. If the green DS2 LED flickers during SCSI bus operation, check P2 Adapter Board fuse F1.

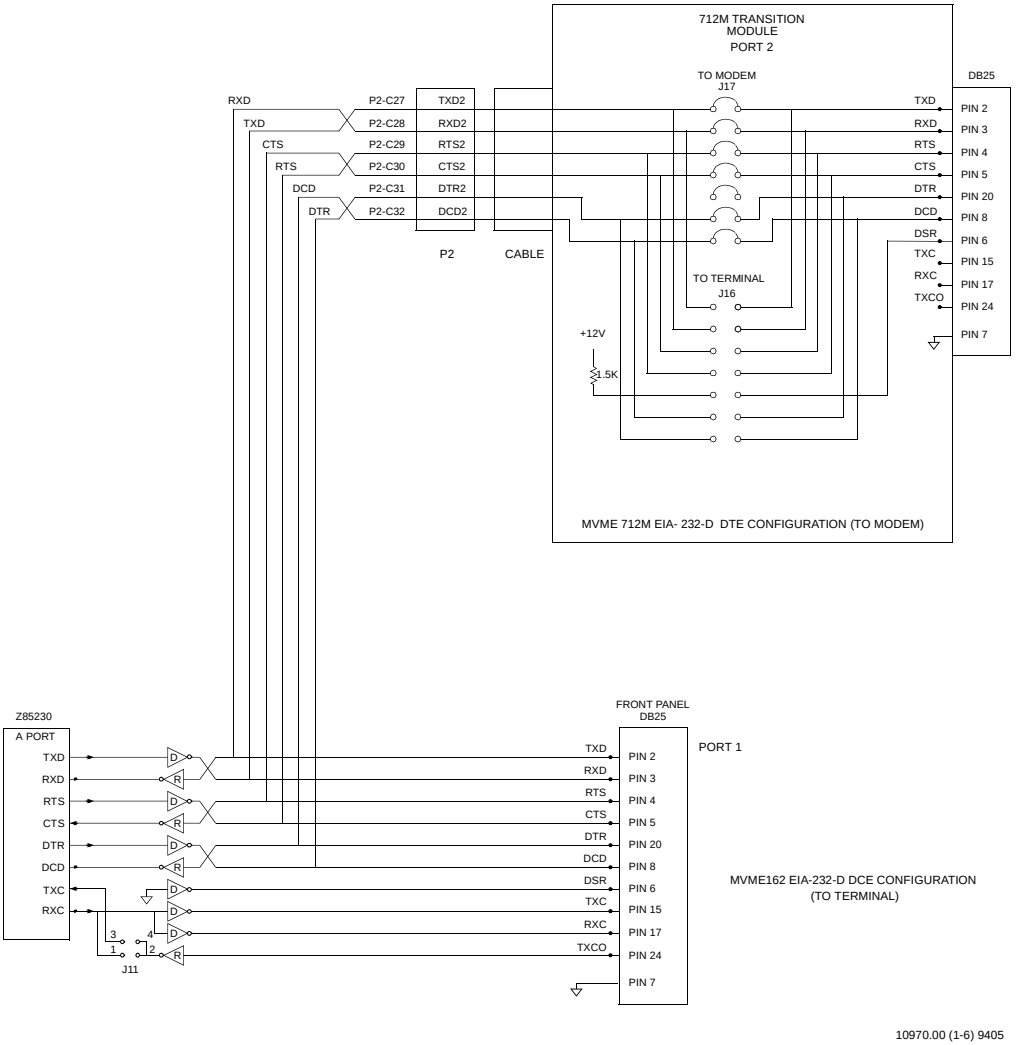

Figure 2-3. MVME162/MVME712M EIA-232-D Connection Diagram (Sheet 1 of 6)

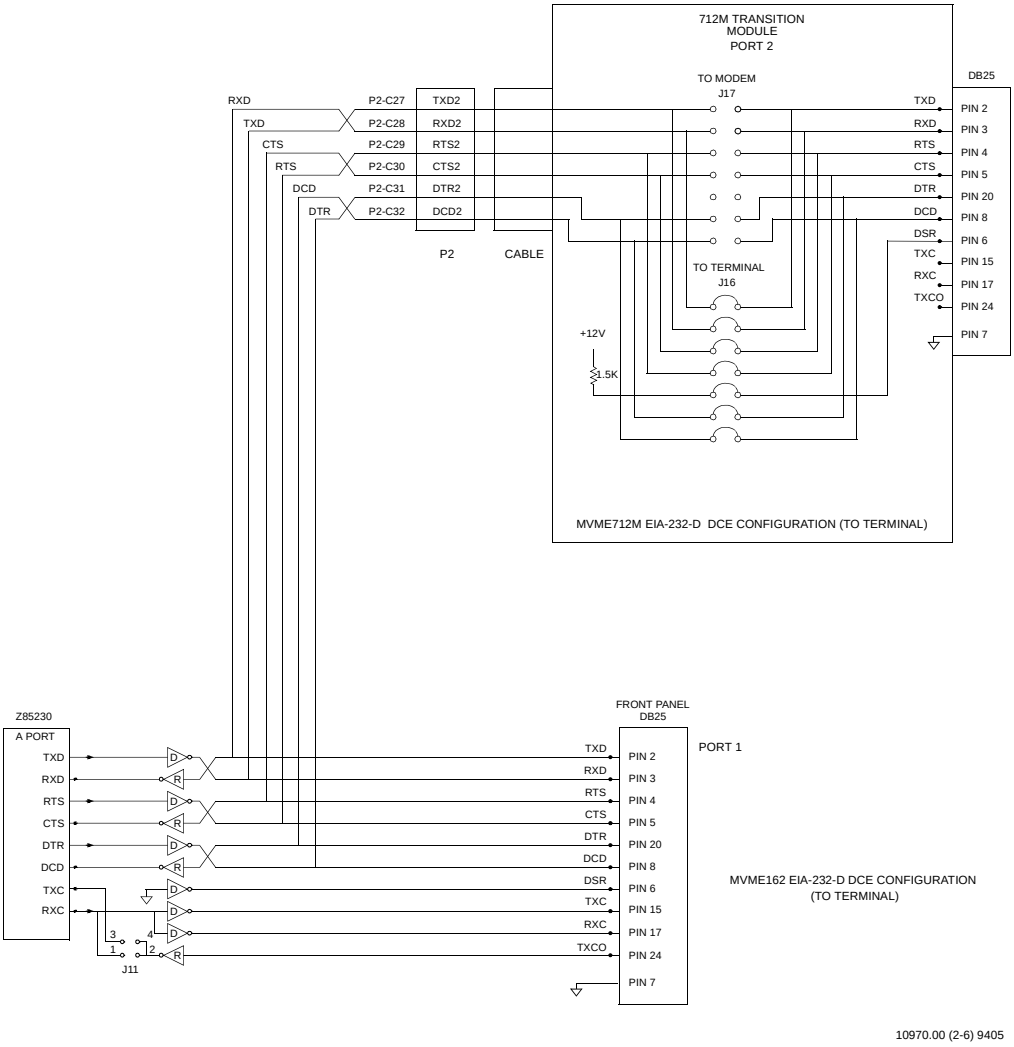

Figure 2-3. MVME162/MVME712M EIA-232-D Connection Diagram (Sheet 2 of 6)

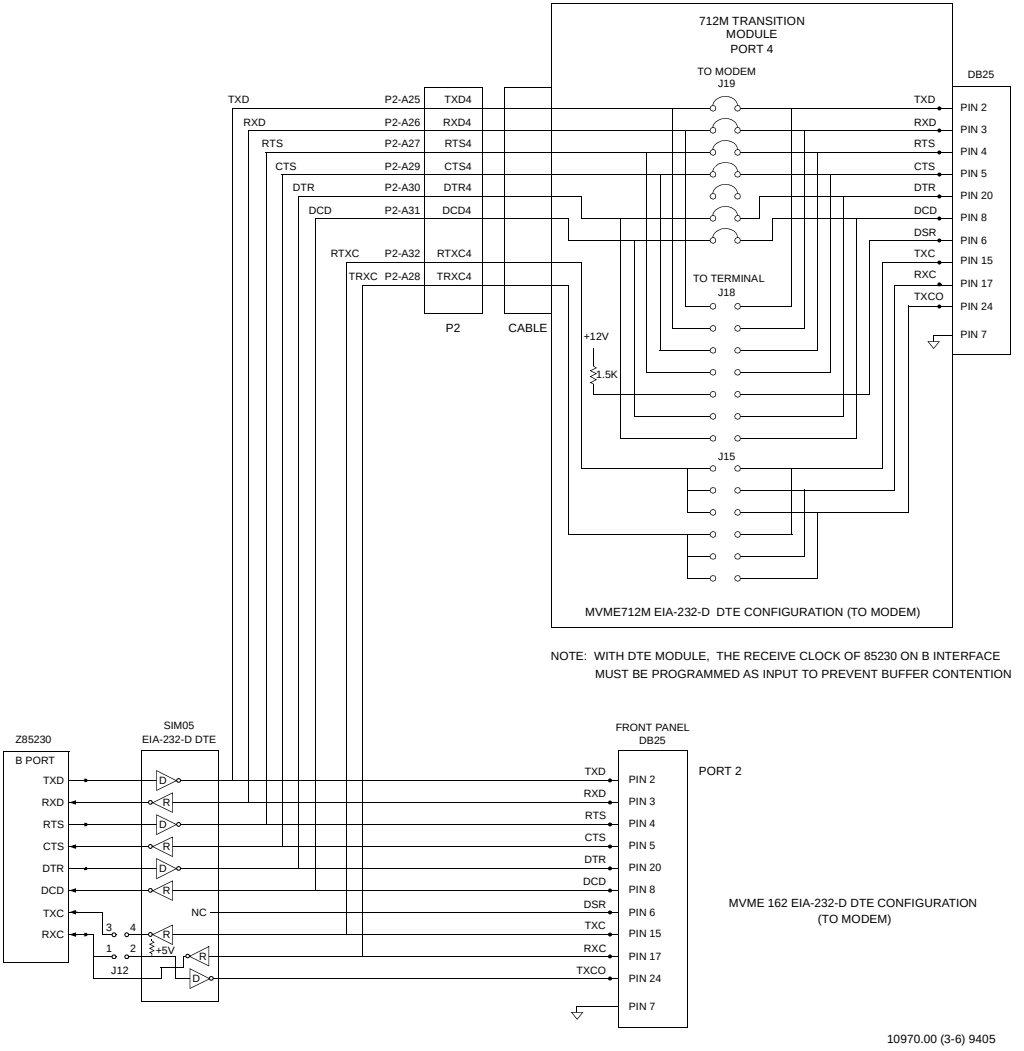

Figure 2-3. MVME162/MVME712M EIA-232-D Connection Diagram (Sheet 3 of 6)

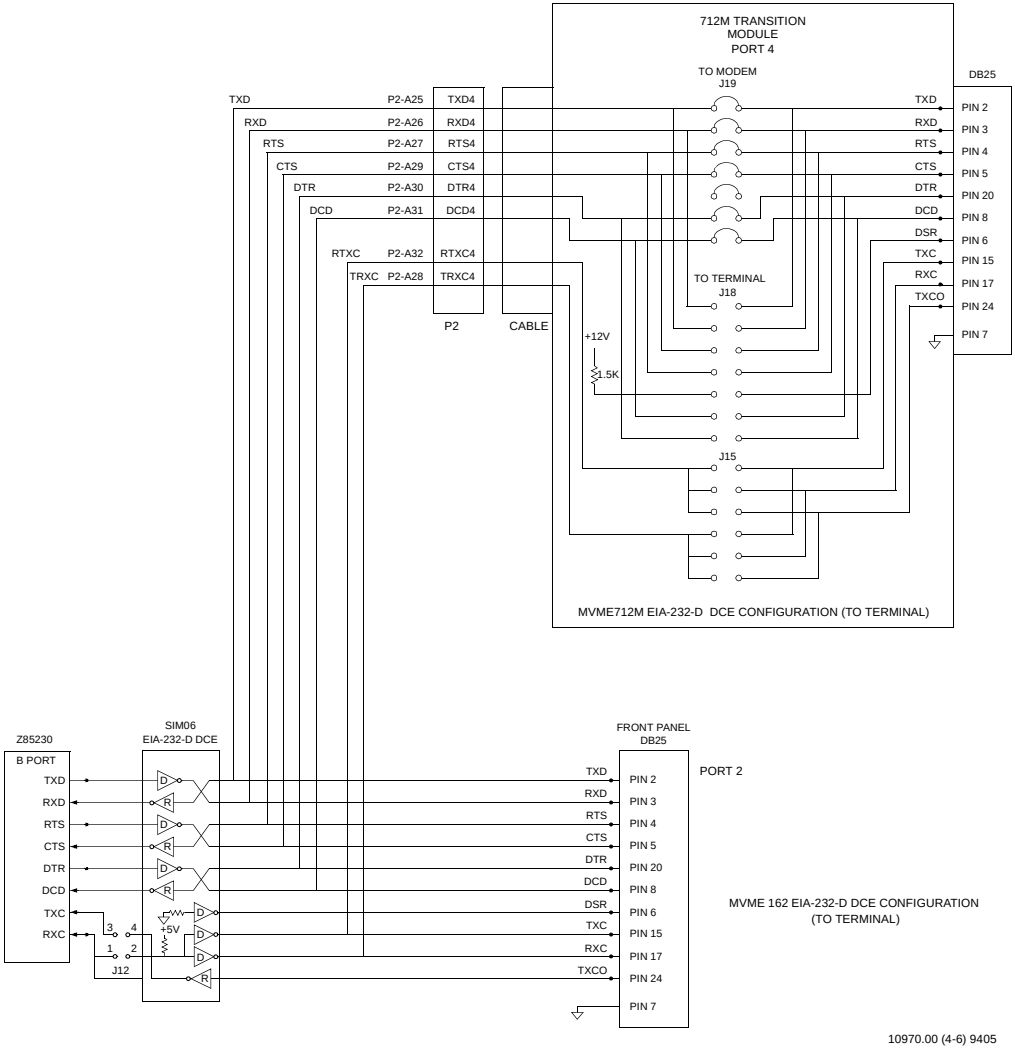

Figure 2-3. MVME162/MVME712M EIA-232-D Connection Diagram (Sheet 4 of 6)

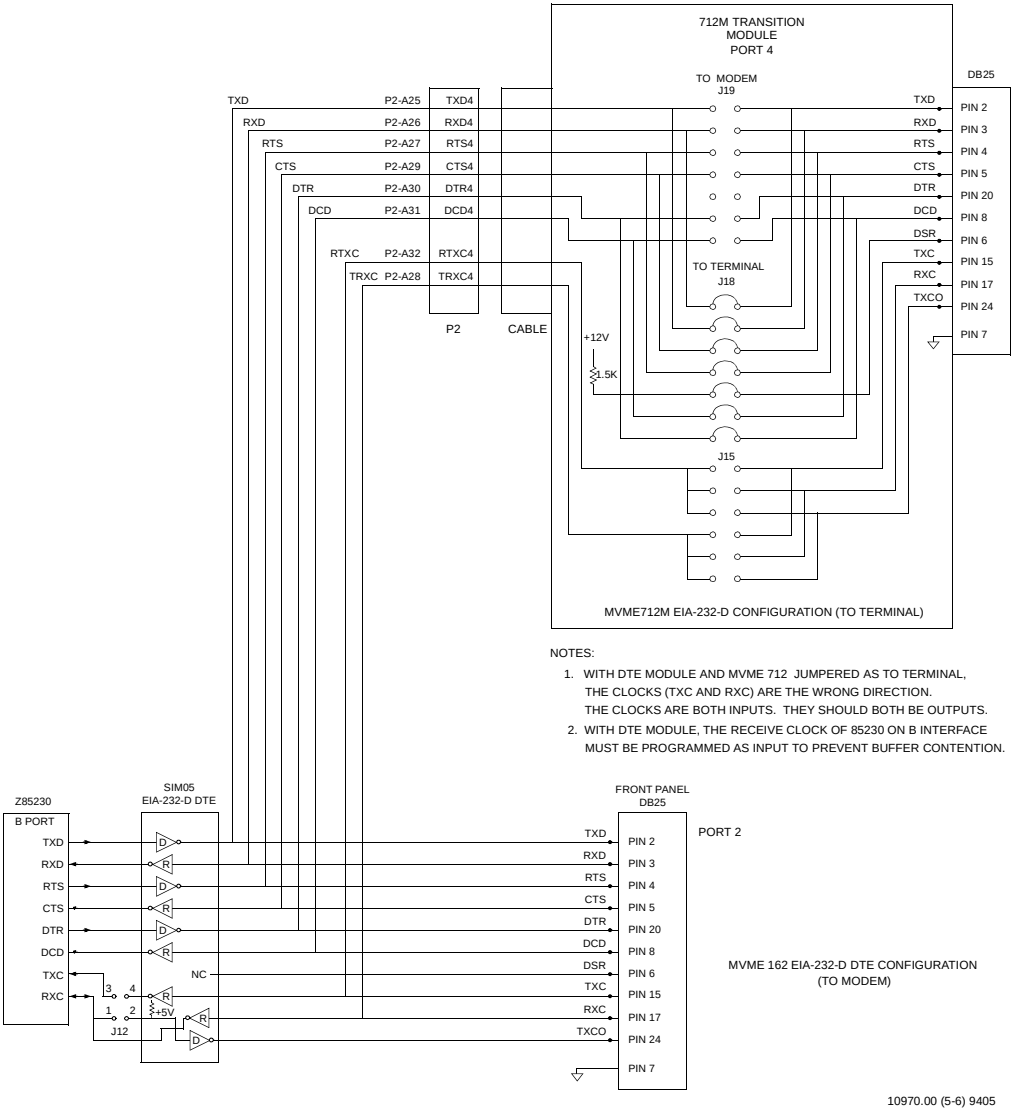

Figure 2-3. MVME162/MVME712M EIA-232-D Connection Diagram (Sheet 5 of 6)

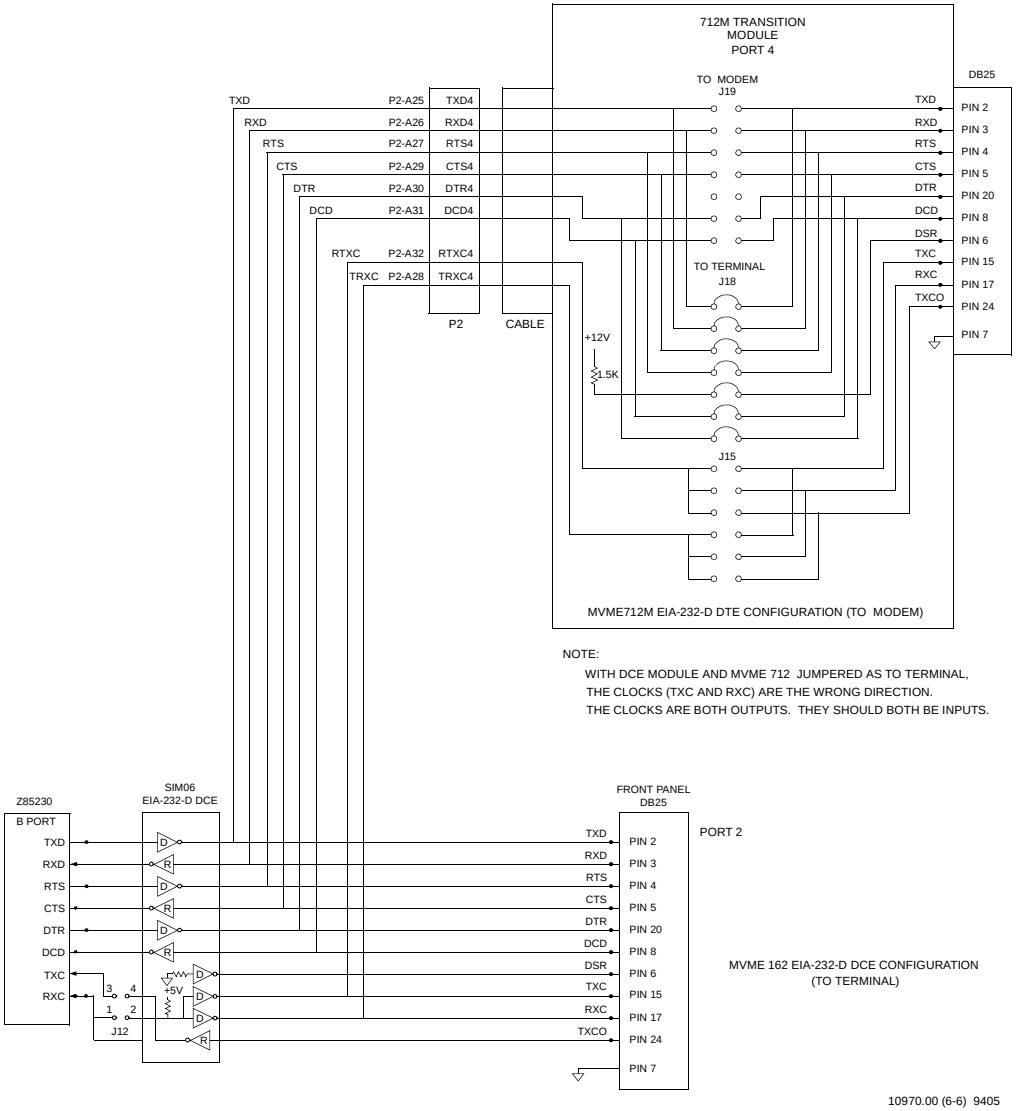

Figure 2-3. MVME162/MVME712M EIA-232-D Connection Diagram (Sheet 6 of 6)

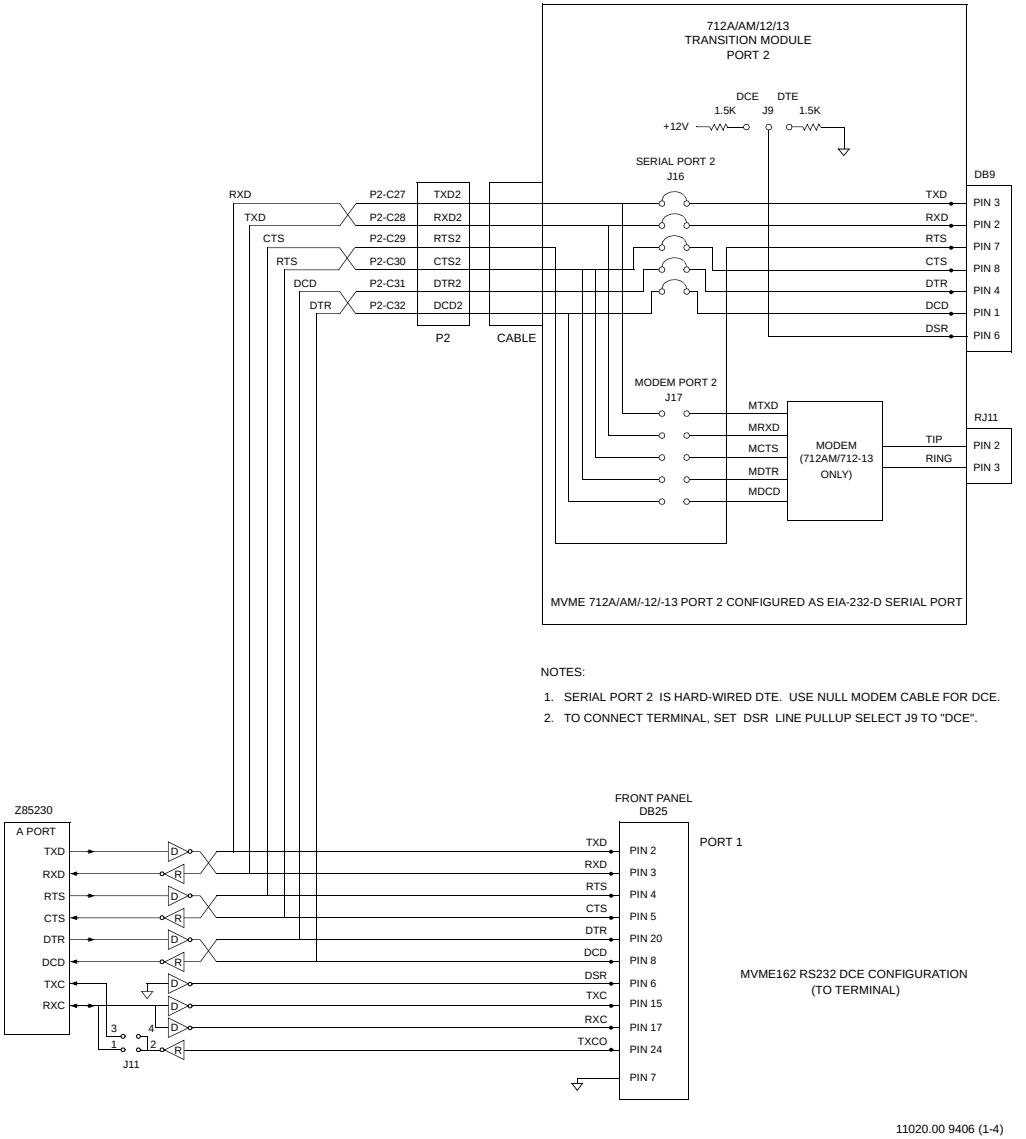

Figure 2-4. MVME162/MVME712*x* EIA-232-D Connection Diagram (Sheet 1 of 4)

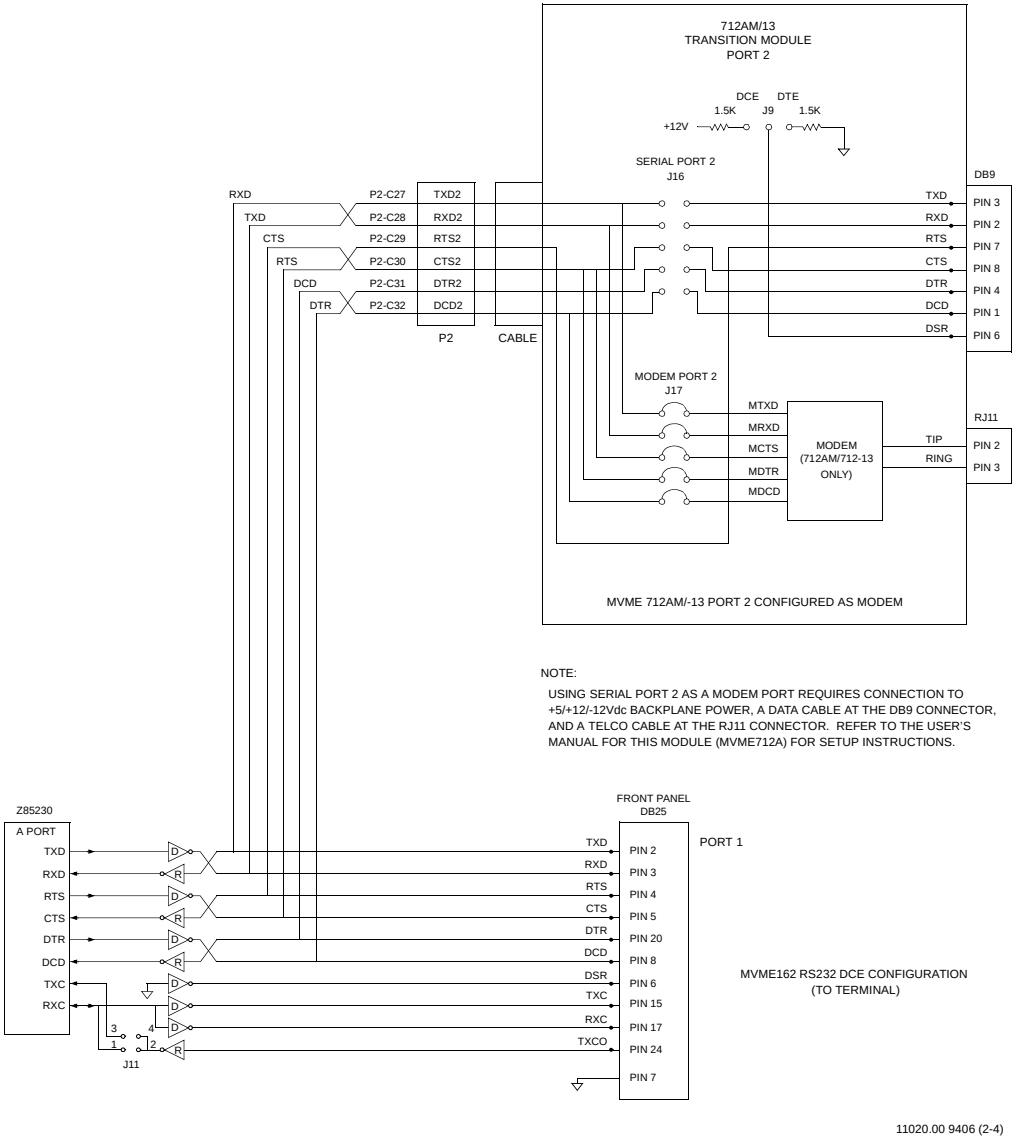

Figure 2-4. MVME162/MVME712*x* EIA-232-D Connection Diagram (Sheet 2 of 4)

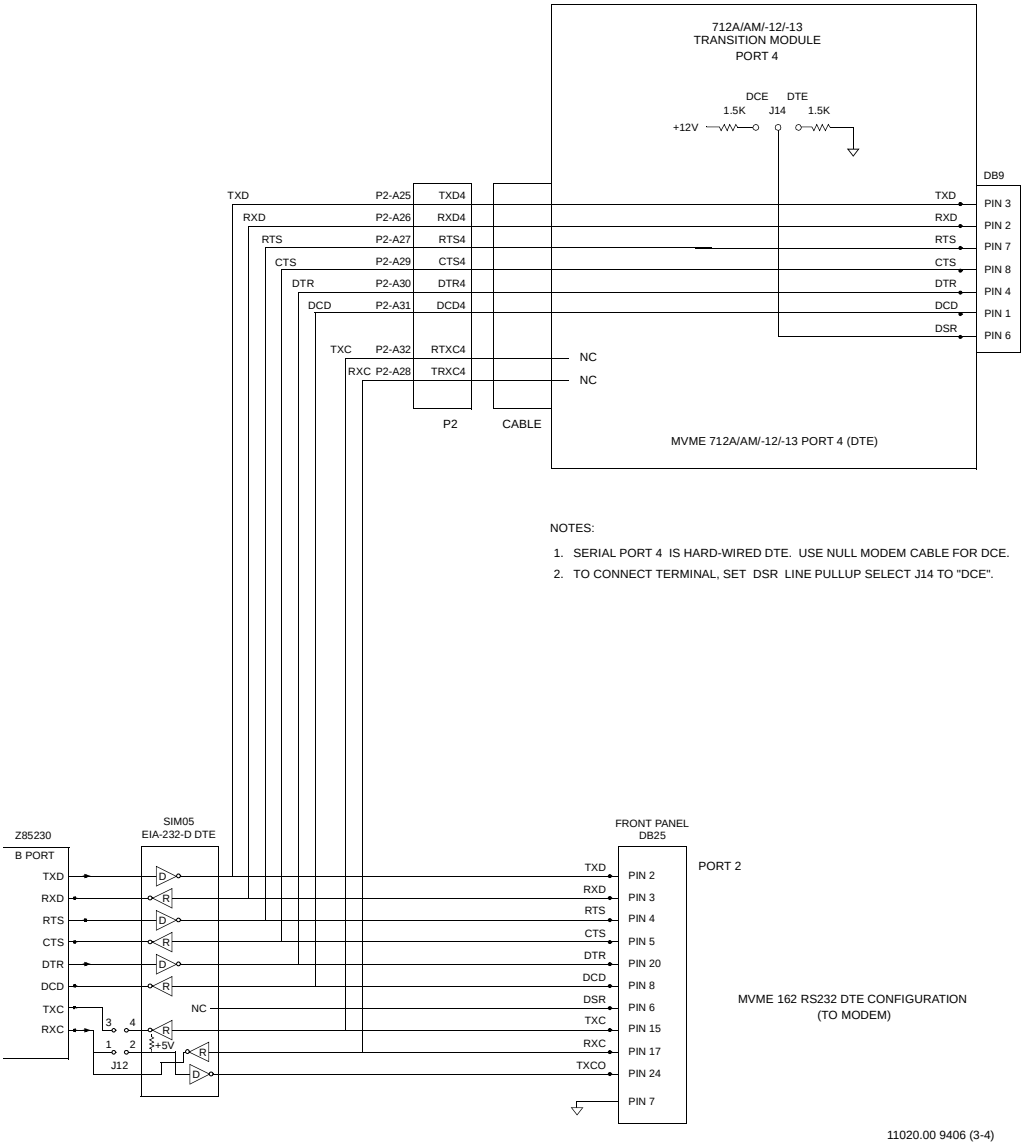

Figure 2-4. MVME162/MVME712*x* EIA-232-D Connection Diagram (Sheet 3 of 4)

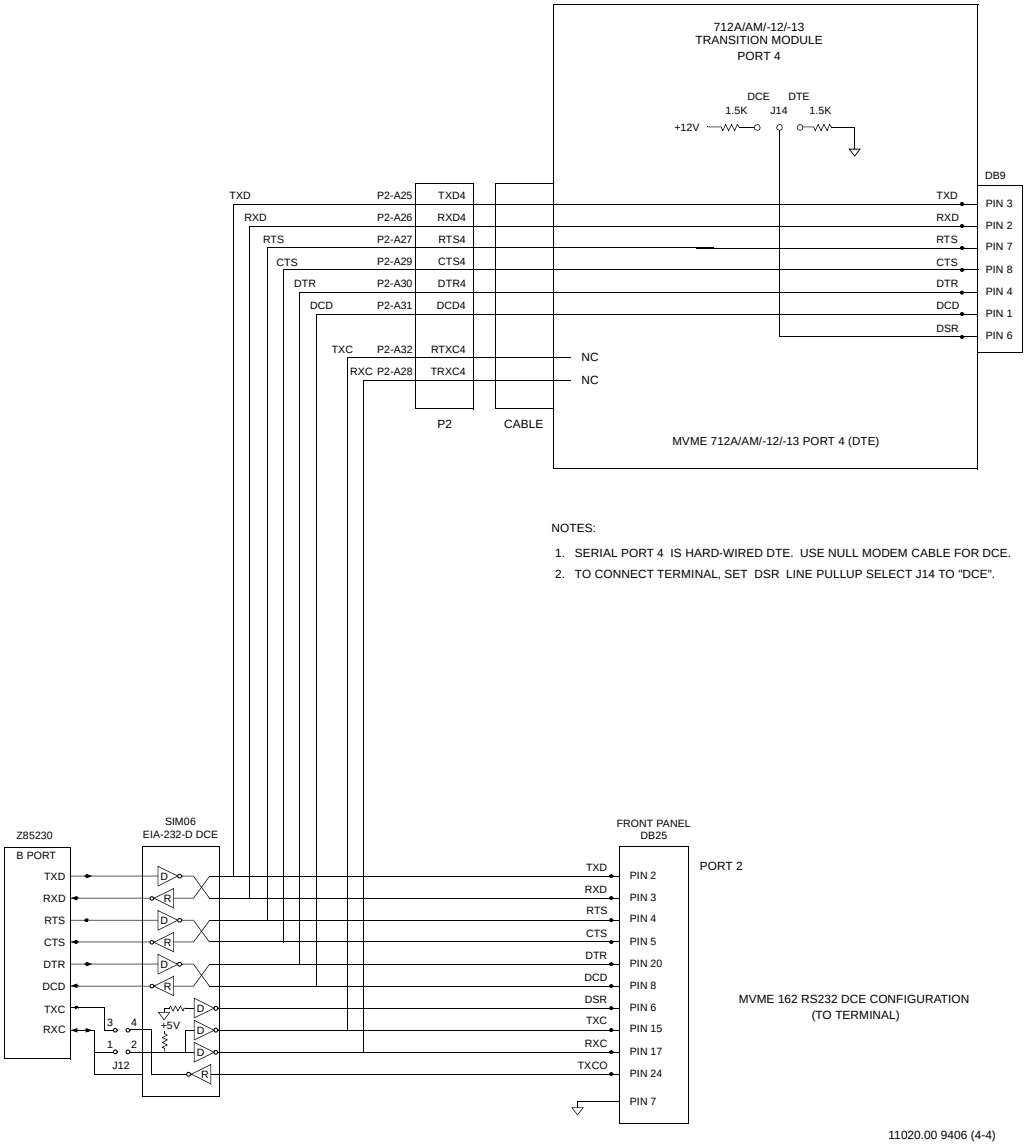

Figure 2-4. MVME162/MVME712*x* EIA-232-D Connection Diagram (Sheet 4 of 4)

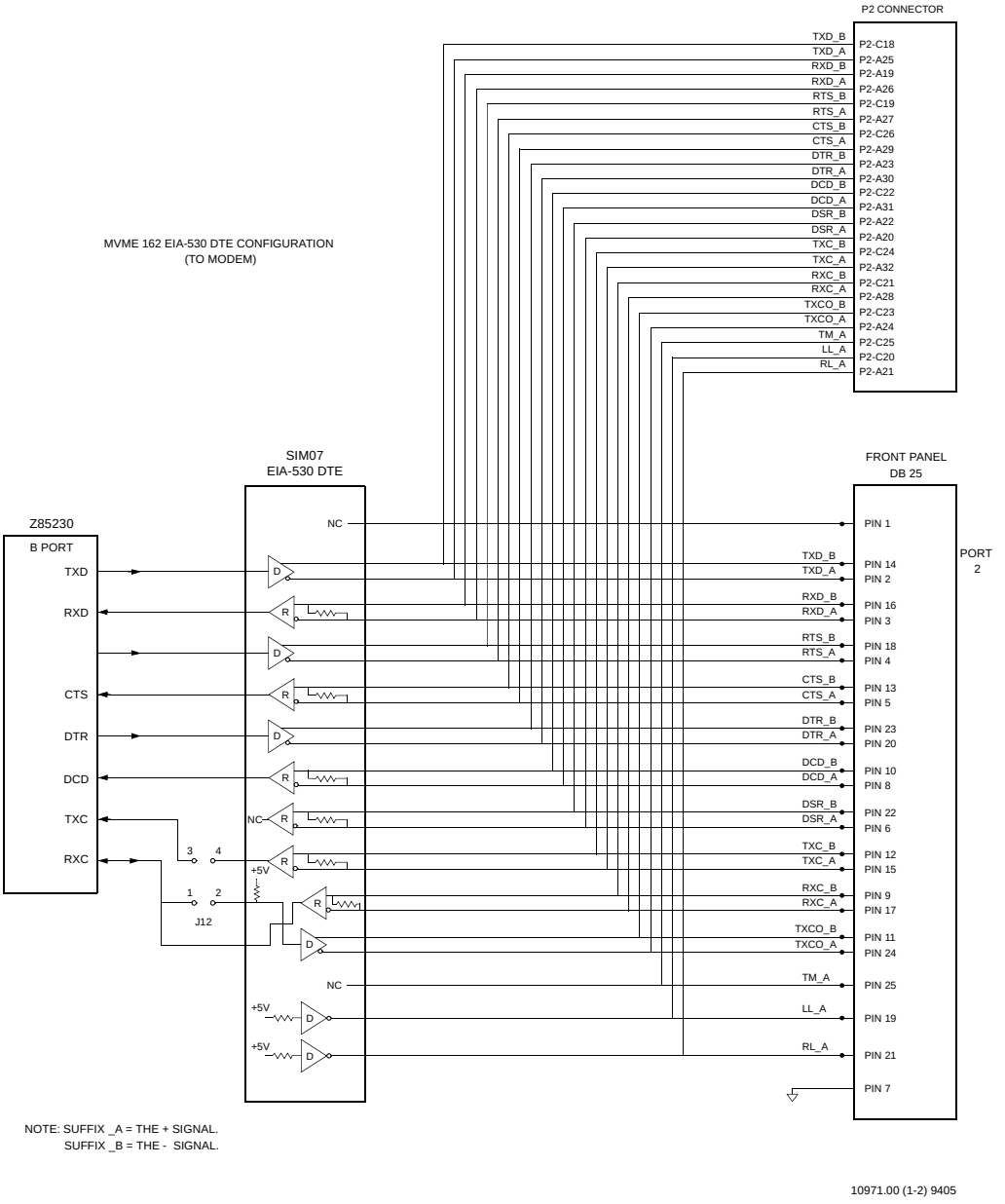

Figure 2-5. MVME162 EIA-530 Connection Diagram (Sheet 1 of 2)

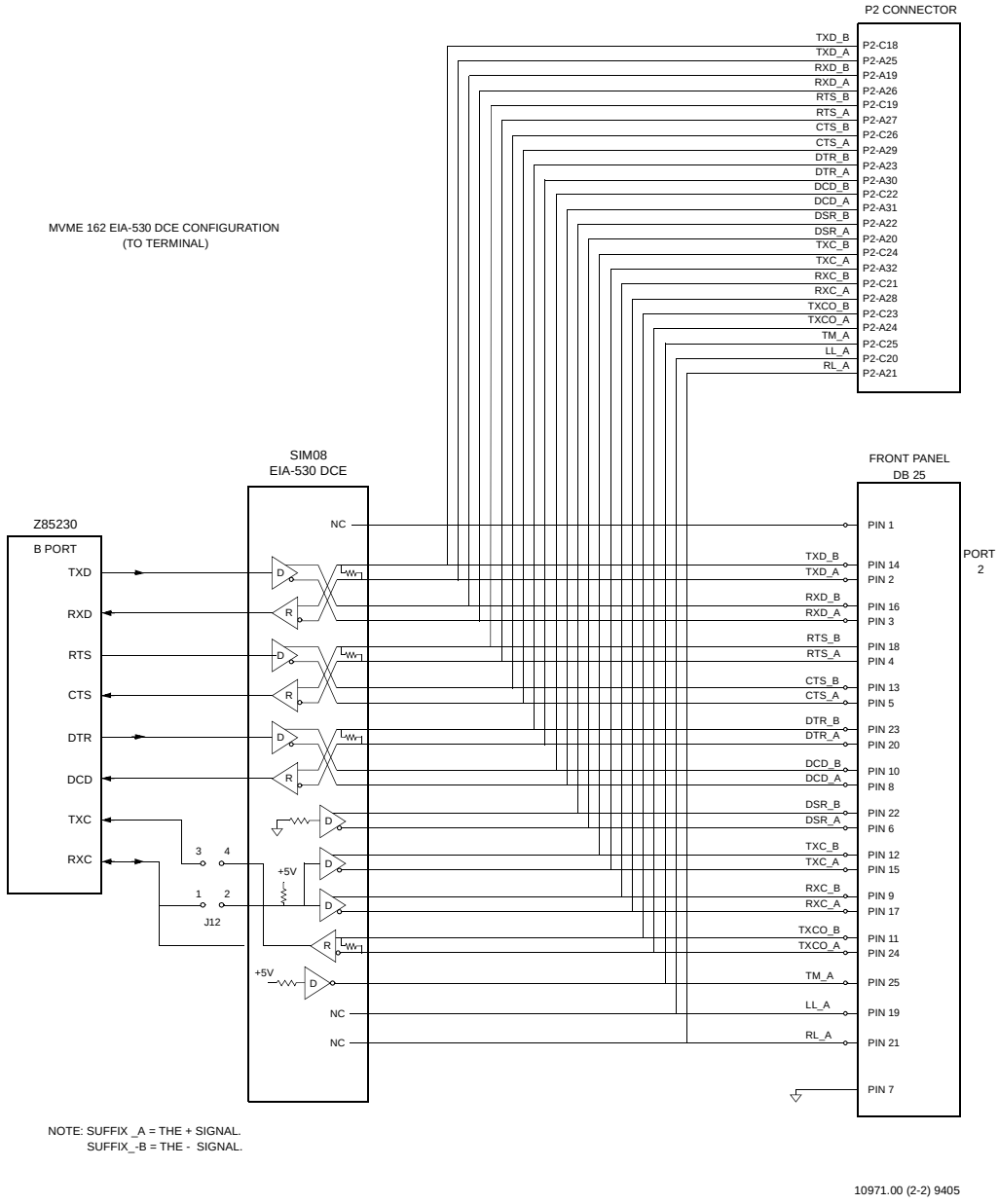

Figure 2-5. MVME162 EIA-530 Connection Diagram (Sheet 2 of 2)

OPERATING INSTRUCTIONS 3

Introduction

This chapter provides information necessary to use the MVME162 in a system configuration. This includes a description of the switches and LEDs, memory maps, and software initialization of the module.

Switches and LEDs

The MVME162 front panel has ABORT and RESET switches and eight LED (light-emitting diode) indicators (FAIL, STAT, RUN, SCON, LAN, FUSE, SCSI, VME).

ABORT Switch (S1)

When enabled by software, the ABORT switch generates an interrupt at a user-programmable level. It is normally used to abort program execution and return to the 162Bug debugger firmware located in the MVME162 EPROM and Flash memory.

The ABORT switch interrupter in the MCchip ASIC is an edge-sensitive interrupter connected to the ABORT switch. This interrupter is filtered to remove switch bounce.

RESET Switch (S2)

The RESET switch resets all onboard devices; it also drives SYSRESET* if the MVME162 is the system controller. The RESET switch may be disabled by software.

The VMEchip2 includes both a global and a local reset driver. When the VMEchip2 operates as the VMEbus system controller, the reset driver provides a global system reset by asserting the VMEbus signal SYSRESET*. A SYSRESET* may be generated by the RESET switch, a power-up reset, a watchdog timeout, or by a control bit in the LCSR in the VMEchip2. SYSRESET* remains asserted for at least 200 ms, as required by the VMEbus specification.

Similarly, the VMEchip2 provides an input signal and a control bit to initiate a local reset operation. By setting a control bit, software can maintain a board in a reset state, disabling a faulty board from participating in normal system operation. The local reset driver is enabled even when the VMEchip2 is not the

system controller. A local reset may be generated by the RESET switch, a power-up reset, a watchdog timeout, a VMEbus SYSRESET*, or a control bit in the GCSR.

Note **For an MVME162 without the VMEbus option (i.e., with no VMEchip2), the LCSR control bit is not available to reset the module. In this case, the watchdog timer is allowed to time out to reset the MVME162.**

Front Panel Indicators (DS1 - DS4)

There are eight LEDs on the MVME162 front panel: FAIL, STAT, RUN, SCON, LAN, FUSE, SCSI, and VME.

- FAIL LED (red). Lights when the BRDFAIL* signal line is active. Part of DS1.
- STAT LED (yellow). Driven by the MC68040 status lines on the MVME162. Lights when a halt condition from the processor is detected. Part of DS1.
- RUN LED (green). Lights when the local bus TIP* signal line is low. This indicates one of the local bus masters is executing a local bus cycle. Part of DS2.
- SCON LED (green). Lights when the VMEchip2 in the MVME162 is the VMEbus system controller. Part of DS2.
- LAN LED (green). Lights when the LAN chip is local bus master. Part of DS3.
- FUSE LED (green). Lights when power is available to the transceiver interface (the MVME162 supplies +12V power to the LAN Ethernet transceiver interface through a fuse). Part of DS3.
- SCSI LED (green). Lights when the SCSI chip is local bus master. Part of DS4.
- VME LED (green). Lights when the board is using the VMEbus (VMEbus AS* line asserted by the VMEchip2) or when the board is accessed by the VMEbus (VMEchip2 is the local bus master). Part of DS4.

Memory Maps

There are two points of view for memory maps:

- ❏ The mapping of all resources as viewed by local bus masters (local bus memory map)
- ❏ The mapping of onboard resources as viewed by VMEbus masters (VMEbus memory map)

Local Bus Memory Map

The local bus memory map is split into different address spaces by the Transfer Type (TT) signals. The local resources respond to the normal access and interrupt acknowledge codes.

Normal Address Range

The memory map of devices that respond to the normal address range is shown in the following tables. The normal address range is defined by the TT signals on the local bus. For the MVME162, transfer types 0, 1, and 2 define the normal address range. Table 3-1 defines the entire map ($00000000 to $FFFFFFFF). Many areas of the map are user-programmable, and suggested uses are shown in the table. The cache inhibit function is programmable in the MC68*xx*040 MMU. The onboard I/O space must be marked ‘‘cache inhibit’’ and serialized in its page table. Table 3-2 further defines the map for the local I/O devices.

Table 3-1. Local Bus Memory Map

Address Range	Devices Accessed	Port Width	Size	Software Cache Inhibit	Notes
Programmable	DRAM on Board	D32	1MB-8MB	N	2
Programmable	SRAM	D32	128KB-2MB	N	2
Programmable	VMEbus A32/A24	D32/D16	--	?	4
Programmable	IP_a Memory	D32-D8	64 KB-8 MB	?	2, 4
Programmable	IP_b Memory	D32-D8	64 KB-8 MB	?	2, 4
Programmable	IP_c Memory	D32-D8	64 KB-8 MB	?	2, 4
Programmable	IP_d Memory	D32-D8	64 KB-8 MB	?	2, 4
$FF800000-$FF9FFFFF	Flash/EPROM	D32	2 MB	N	1, 5
$FFA00000-$FFBFFFFF	EPROM/Flash	D32	2 MB	N	6
$FFC00000-$FFCFFFFF	Not Decoded	D32	1 MB	N	7
$FFD00000-$FFDFFFFF	Not Decoded	D32	1 MB	N	7
$FFE00000-$FFE7FFFF	SRAM default	D32	512 KB	N	--
$FFE80000-$FFEFFFFF	Not Decoded	--	512 KB	N	7
$FFF00000-$FFFEFFFF	Local I/O Devices (Refer to next table)	D32-D8	878 KB	Y	3
$FFFF0000-$FFFFFFFF	VMEbus A16	D32/D16	64 KB	?	2, 4

Notes

1. **Reset enables the decoder for this space of the memory map so that it will decode address spaces $FF800000 - $FF9FFFFF and $00000000 - $003FFFFF. The decode at 0 must be disabled in the MCchip before DRAM is enabled. DRAM is enabled with the DRAM Control Register at address $FFF42048, bit 24. PROM/Flash is disabled at the low address space with PROM Control Register at address $FFF42040, bit 20.**
2. **This area is user-programmable. The DRAM and SRAM decoder is programmed in the MCchip, the local-to-VMEbus decoders are programmed in the VMEchip2, and the IP memory space is programmed in the IPIC.**
3. **Size is approximate.**
4. **Cache inhibit depends on devices in area mapped.**

5. **The EPROM and Flash are sized by the MCchip ASIC from an 8-bit private bus to the 32-bit MPU local bus. Because the device size is less than the allocated memory map for some entries, the device contents repeat for those entries.**

   If jumper GPIO3 is installed, the Flash device is accessed. If GPIO3 is not installed, the EPROM is accessed.

6. **The Flash and EPROM are sized by the MCchip ASIC from an 8-bit private bus to the 32-bit MPU local bus. Because the device size is less than the allocated memory map for some entries, the device contents repeat for those entries.**

   If jumper GPIO3 is installed, the PROM device is accessed. If GPIO3 is not installed, the Flash is accessed.

7. **These areas are not decoded unless one of the programmable decoders are initialized to decode this space. If they are not decoded, an access to this address range will generate a local bus timeout. The local bus timer must be enabled.**

Table 3-2 focuses on the ‘‘Local I/O Devices’’ portion of the local bus main memory map.

Table 3-2. Local I/O Devices Memory Map

Address Range	Devices Accessed	Port Width	Size	Notes
$FFF00000 - $FFF3FFFF	Reserved	- -	256 KB	4
$FFF40000 - $FFF400FF	VMEchip2 (LCSR)	D32	256 B	1, 3
$FFF40100 - $FFF401FF	VMEchip2 (GCSR)	D32-D8	256 B	1, 3
$FFF40200 - $FFF40FFF	Reserved	- -	3.5 KB	4, 5
$FFF41000 - $FFF41FFF	Reserved	- -	4 KB	4
$FFF42000 - $FFF42FFF	MCchip	D32-D8	4 KB	1
$FFF43000 - $FFF44FFF	Reserved	- -	8 KB	4
$FFF45000 - $FFF45800	SCC #1 (Z85230)	D8	2 KB	1, 2
$FFF45801 - $FFF45FFF	SCC #2 (Z85230)	D8	2 KB	1, 2
$FFF46000 - $FFF46FFF	LAN (82596CA)	D32	4 KB	1, 6
$FFF47000 - $FFF47FFF	SCSI (53C710)	D32-D8	4 KB	1
$FFF48000 - $FFF57FFF	Reserved	- -	64 KB	4
$FFF58000 - $FFF5807F	IPIC IP_a I/O	D16	128 B	1
$FFF58080 - $FFF580FF	IPIC IP_a ID	D16	128 B	1
$FFF58100 - $FFF5817F	IPIC IP_b I/O	D16	128 B	1
$FFF58180 - $FFF581FF	IPIC IP_b ID Read	D16	128 B	1
$FFF58200 - $FFF5827F	IPIC IP_c I/O	D16	128 B	1

Table 3-2. Local I/O Devices Memory Map (Continued)

Address Range	Devices Accessed	Port Width	Size	Notes
$FFF58280 - $FFF582FF	IPIC IP_c ID	D16	128 B	1
$FFF58300 - $FFF5837F	IPIC IP_d I/O	D16	128 B	1
$FFF58380 - $FFF583FF	IPIC IP_d ID Read	D16	128 B	1
$FFF58400 - $FFF584FF	IPIC IP_ab I/O	D32-D16	256 B	1
$FFF58500 - $FFF585FF	IPIC IP_cd I/O	D32-D16	256 B	8
$FFF58600 - $FFF586FF	IPIC IP_ab I/O Repeated	D32-D16	256 B	1
$FFF58700 - $FFF587FF	IPIC IP_cd I/O Repeated	D32-D16	256 B	8
$FFF58800 - $FFF5887F	Reserved	- -	128 B	1
$FFF58880 - $FFF588FF	Reserved	- -	128 B	1
$FFF58900 - $FFF5897F	Reserved	- -	128 B	1
$FFF58980 - $FFF589FF	Reserved	- -	128 B	1
$FFF58A00 - $FFF58A7F	Reserved	- -	128 B	1
$FFF58A80 - $FFF58AFF	Reserved	- -	128 B	1
$FFF58B00 - $FFF58B7F	Reserved	- -	128 B	1
$FFF58B80 - $FFF58BFF	Reserved	- -	128 B	1
$FFF58C00 - $FFF58CFF	Reserved	- -	256 B	1
$FFF58D00 - $FFF58DFF	Reserved	- -	256 B	1
$FFF58E00 - $FFF58EFF	Reserved	- -	256 B	1
$FFF58F00 - $FFF58FFF	Reserved	- -	256 B	1
$FFFBC000 - $FFFBC01F	IPIC Registers	D32-D8	2 KB	1
$FFFBC800 - $FFFBC81F	Reserved	- -	2 KB	1
$FFFBD000 - $FFFBFFFF	Reserved	- -	12 KB	4
$FFFC0000 - $FFFC7FFF	MK48T08 (BBRAM, TOD Clock)	D32-D8	32 KB	1
$FFFC8000 - $FFFCBFFF	MK48T08 & Disable Flash writes	D32-D8	16 KB	1, 7
$FFFCC000 - $FFFCFFFF	MK48T08 & Enable Flash writes	D32-D8	16 KB	1, 7
$FFFD0000 - $FFFEFFFF	Reserved	- -	128 KB	4

Notes

1. **For a complete description of the register bits, refer to the data sheet for the specific chip. For a more detailed memory map, refer to the following detailed peripheral device memory maps.**
2. **The SCC is an 8-bit device located on an MCchip private data bus. Byte access is required.**

3. **Writes to the LCSR in the VMEchip2 must be 32 bits. LCSR writes of 8 or 16 bits terminate with a TEA signal. Writes to the GCSR may be 8, 16 or 32 bits. Reads to the LCSR and GCSR may be 8, 16 or 32 bits. Byte reads should be used to read the interrupt vector.**
4. **This area does not return an acknowledge signal. If the local bus timer is enabled, the access times out and is terminated by a TEA signal.**
5. **Size is approximate.**
6. **Port commands to the 82596CA must be written as two 16-bit writes: upper word first and lower word second.**
7. **Refer to the Flash and EPROM Interface section in the MCchip description in Chapter 3.**

Detailed I/O Memory Maps

Tables 3-3 through 3-12 provide detailed memory maps for the VMEchip2, the MCchip, the Zilog Z85230 serial communications controller, the Intel 82596CA LAN controller, the NCR 53C710 SCSI controller, the IPIC chip, and the MK48T08 BBRAM / TOD Clock.

Table 3-3. VMEchip2 Memory Map (Sheet 1 of 3)

VMEchip2 LCSR Base Address = $FFF40000

OFFSET:

	31	30	29	28	27	26	25	24	23	22	21	20	19	18	17	16
0	SLAVE ENDING ADDRESS 1															
4	SLAVE ENDING ADDRESS 2															
8	SLAVE ADDRESS TRANSLATION ADDRESS 1															
C	SLAVE ADDRESS TRANSLATION ADDRESS 2															
10					ADDER 2	SNP 2		WP 2	SUP 2	USR 2	A32 2	A24 2	BLK D64 2	BLK 2	PRGM 2	DATA 2
	31	30	29	28	27	26	25	24	23	22	21	20	19	18	17	16
14	MASTER ENDING ADDRESS 1															
18	MASTER ENDING ADDRESS 2															
1C	MASTER ENDING ADDRESS 3															
20	MASTER ENDING ADDRESS 4															
24	MASTER ADDRESS TRANSLATION ADDRESS 4															
28	MAST D16 EN	MAST WP EN	MASTER AM 4						MAST D16 EN	MAST WP EN	MASTER AM 3					
2C	GCSR GROUP SELECT								GCSR BOARD SELECT				MAST 4 EN	MAST 3 EN	MAST 2 EN	MAST 1 EN
	31	30	29	28	27	26	25	24	23	22	21	20	19	18	17	16
30											WAIT RMW	ROM ZERO	DMA TB SNP MODE		SRAM SPEED	
34																
38	DMA CONTROLLER															
3C	DMA CONTROLLER															
40	DMA CONTROLLER															
44	DMA CONTROLLER															
48		TICK 2/1	TICK IRQ 1 EN	CLR IRQ	IRQ STAT	VMEBUS INTERRUPT LEVEL			VMEBUS INTERRUPT VECTOR							

This sheet continues on facing page. ⟶

15	14	13	12	11	10	9	8	7	6	5	4	3	2	1	0
SLAVE STARTING ADDRESS 1															
SLAVE STARTING ADDRESS 2															
SLAVE ADDRESS TRANSLATION SELECT 1															
SLAVE ADDRESS TRANSLATION SELECT 2															
				ADDER 1	SNP 1			WP 1	SUP 1	USR 1	A32 1	A24 1	BLK D64 1	BLK 1	PRGM 1	DATA 1
15	14	13	12	11	10	9	8	7	6	5	4	3	2	1	0
MASTER STARTING ADDRESS 1															
MASTER STARTING ADDRESS 2															
MASTER STARTING ADDRESS 3															
MASTER STARTING ADDRESS 4															
MASTER ADDRESS TRANSLATION SELECT 4															
MAST D16 EN	MAST WP EN	MASTER AM 2						MAST D16 EN	MAST WP EN	MASTER AM 1					
IO2 EN	IO2 WP EN	IO2 S/U	IO2 P/D	IO1 EN	IO1 D16 EN	IO1 WP EN	IO1 S/U	ROM SIZE		ROM BANK B SPEED			ROM BANK A SPEED		
15	14	13	12	11	10	9	8	7	6	5	4	3	2	1	0
ARB ROBN	MAST DHB	MAST DWB		MST FAIR	MST RWD	MASTER VMEBUS		DMA HALT	DMA EN	DMA TBL	DMA FAIR	DM RELM		DMA VMEBUS	
DMA TBL INT	DMA LB SNP MODE			DMA INC VME	DMA INC LB	DMA WRT	DMA D16	DMA D64 BLK	DMA BLK	DMA AM 5	DMA AM 4	DMA AM 3	DMA AM 2	DMA AM 1	DMA AM 0
LOCAL BUS ADDRESS COUNTER															
VMEBUS ADDRESS COUNTER															
BYTE COUNTER															
TABLE ADDRESS COUNTER															
DMA TABLE INTERRUPT COUNT				MPU CLR STAT	MPU LBE ERR	MPU LPE ERR	MPU LOB ERR	MPU LTO ERR	DMA LBE ERR	DMA LPE ERR	DMA LOB ERR	DMA LTO ERR	DMA TBL ERR	DMA VME ERR	DMA DONE

1360 9403

← This sheet begins on facing page.

Table 3-3. VMEchip2 Memory Map (Sheet 2 of 3)

VMEchip2 LCSR Base Address = $FFF40000
OFFSET:

	31	30	29	28	27	26	25	24	23	22	21	20	19	18	17	16
4C								ARB BGTO EN	DMA TIME OFF			DMA TIME ON			VME GLOBAL TIMER	
50	TICK TIMER 1															
54	TICK TIMER 1															
58	TICK TIMER 2															
5C	TICK TIMER 2															
60		SCON	SYS FAIL	BRD FAIL STAT	PURS STAT	CLR PURS STAT	BRD FAIL OUT	RST SW EN	SYS RST	WD CLR TO	WD CLR CNT	WD TO STAT	TO BF EN	WD SRST LRST	WD RST EN	WD EN
64	PRE															
	31	30	29	28	27	26	25	24	23	22	21	20	19	18	17	16
68	AC FAIL IRQ	AB IRQ	SYS FAIL IRQ	MWP BERR IRQ	PE IRQ	IRQ1E IRQ	TIC2 IRQ	TIC1 IRQ	VME IACK IRQ	DMA IRQ	SIG3 IRQ	SIG2 IRQ	SIG1 IRQ	SIG0 IRQ	LM1 IRQ	LM0 IRQ
6C	EN IRQ 31	EN IRQ 30	EN IRQ 29	EN IRQ 28	EN IRQ 27	EN IRQ 26	EN IRQ 25	EN IRQ 24	EN IRQ 23	EN IRQ 22	EN IRQ 21	EN IRQ 20	EN IRQ 19	EN IRQ 18	EN IRQ 17	EN IRQ 16
70																
74	CLR IRQ 31	CLR IRQ 30	CLR IRQ 29	CLR IRQ 28	CLR IRQ 27	CLR IRQ 26	CLR IRQ 25	CLR IRQ 24	CLR IRQ 23	CLR IRQ 22	CLR IRQ 21	CLR IRQ 20	CLR IRQ 19	CLR IRQ 18	CLR IRQ 17	CLR IRQ 16
78		AC FAIL IRQ LEVEL				ABORT IRQ LEVEL				SYS FAIL IRQ LEVEL				MST WP ERROR IRQ LEVEL		
7C		VME IACK IRQ LEVEL				DMA IRQ LEVEL				SIG 3 IRQ LEVEL				SIG 2 IRQ LEVEL		
80		SW7 IRQ LEVEL				SW6 IRQ LEVEL				SW5 IRQ LEVEL				SW4 IRQ LEVEL		
84		SPARE IRQ LEVEL				VME IRQ 7 IRQ LEVEL				VME IRQ 6 IRQ LEVEL				VME IRQ 5 IRQ LEVEL		
88	VECTOR BASE REGISTER 0				VECTOR BASE REGISTER 1				MST IRQ EN	SYS FAIL LEVEL	AC FAIL LEVEL	ABORT LEVEL	GPIOEN			
8C																

This sheet continues on facing page. ⟶

15	14	13	12	11	10	9	8	7	6	5	4	3	2	1	0
VME ACCESS TIMER		LOCAL BUS TIMER		WD TIME OUT SELECT				PRESCALER CLOCK ADJUST							
COMPARE REGISTER															
COUNTER															
COMPARE REGISTER															
COUNTER															
OVERFLOW COUNTER 2					CLR OVF 2	COC EN 2	TIC EN 2	OVERFLOW COUNTER 1					CLR OVF 1	COC EN 1	TIC EN 1
SCALER															
15	14	13	12	11	10	9	8	7	6	5	4	3	2	1	0
SW7 IRQ	SW6 IRQ	SW5 IRQ	SW4 IRQ	SW3 IRQ	SW2 IRQ	SW1 IRQ	SW0 IRQ	SPARE	VME IRQ7	VME IRQ6	VME IRQ5	VME IRQ4	VME IRQ3	VME IRQ2	VME IRQ1
EN IRQ 15	EN IRQ 14	EN IRQ 13	EN IRQ 12	EN IRQ 11	EN IRQ 10	EN IRQ 9	EN IRQ 8	EN IRQ 7	EN IRQ 6	EN IRQ 5	EN IRQ 4	EN IRQ 3	EN IRQ 2	EN IRQ 1	EN IRQ 0
SET IRQ 15	SET IRQ 14	SET IRQ 13	SET IRQ 12	SET IRQ 11	SET IRQ 10	SET IRQ 9	SET IRQ 8								
CLR IRQ 15	CLR IRQ 14	CLR IRQ 13	CLR IRQ 12	CLR IRQ 11	CLR IRQ 10	CLR IRQ 9	CLR IRQ 8								
	P ERROR IRQ LEVEL				IRQ1E IRQ LEVEL				TIC TIMER 2 IRQ LEVEL				TIC TIMER 1 IRQ LEVEL		
	SIG 1 IRQ LEVEL				SIG 0 IRQ LEVEL				LM 1 IRQ LEVEL				LM 0 IRQ LEVEL		
	SW3 IRQ LEVEL				SW2 IRQ LEVEL				SW1 IRQ LEVEL				SW0 IRQ LEVEL		
	VME IRQ 4 IRQ LEVEL				VMEB IRQ 3 IRQ LEVEL				VME IRQ 2 IRQ LEVEL				VME IRQ 1 IRQ LEVEL		
GPIOO				GPIOI				GPI							
								MP IRQ EN	REV EROM	DIS SRAM	DIS MST	NO EL BBSY	DIS BSYT	EN INT	DIS BGN

1361 9403

← This sheet begins on facing page.

This page intentionally left blank.

Table 3-3. VMEchip2 Memory Map (Sheet 3 of 3)

VMEchip2 GCSR Base Address = $FFF40100

Offsets																	
VME-bus	**Local Bus**	15	14	13	12	11	10	9	8	7	6	5	4	3	2	1	0
0	0	CHIP REVISION								CHIP ID							
2	4	LM3	LM2	LM1	LM0	SIG3	SIG2	SIG1	SIG0	RST	ISF	BF	SCON	SYSFL	X	X	X
4	8	GENERAL PURPOSE CONTROL AND STATUS REGISTER 0															
6	C	GENERAL PURPOSE CONTROL AND STATUS REGISTER 1															
8	10	GENERAL PURPOSE CONTROL AND STATUS REGISTER 2															
A	14	GENERAL PURPOSE CONTROL AND STATUS REGISTER 3															
C	18	GENERAL PURPOSE CONTROL AND STATUS REGISTER 4															
E	1C	GENERAL PURPOSE CONTROL AND STATUS REGISTER 5															

Table 3-4. MCchip Register Map

MCchip Base Address = $FFF42000

Offset	D31-D24	D23-D16	D15-D8	D7-D0
$00	MCchip ID	MCchip Revision	General Control	Interrupt Vector Base Register
$04	Tick Timer 1 Compare Register			
$08	Tick Timer 1 Counter Register			
$0C	Tick Timer 2 Compare Register			
$10	Tick Timer 2 Counter Register			
$14	LSB Prescaler Count Register	Prescaler Clock Adjust	Tick Timer 2 Control	Tick Timer 1 Control
$18	Tick Timer 4 Interrupt Control	Tick Timer 3 Interrupt Control	Tick Timer 2 Interrupt Control	Tick Timer 1 Interrupt Control
$1C	DRAM Parity Error Interrupt Control	SCC Interrupt Control	Tick Timer 4 Control	Tick Timer 3 Control
$20	DRAM Space Base Address Register		SRAM Space Base Address Register	
$24	DRAM Space Size	DRAM/SRAM Options	SRAM Space Size	(*Reserved*)
$28	LANC Error Status	(*Reserved*)	LANC Interrupt Control	LANC Bus Error Interrupt Control
$2C	SCSI Error Status	General Purpose Inputs	MVME162 Version	SCSI Interrupt Control
$30	Tick Timer 3 Compare Register			
$34	Tick Timer 3 Counter Register			
$38	Tick Timer 4 Compare Register			
$3C	Tick Timer 4 Counter Register			
$40	Bus Clock	PROM Access Time Control	Flash Access Time Control	ABORT Switch Interrupt Control
$44	RESET Switch Control	Watchdog Timer Control	Access & Watchdog Time Base Select	(*Reserved*)
$48	DRAM Control	(*Reserved*)	MPU Status	(*Reserved*)
$4C	32-bit Prescaler Count Register			

Table 3-5. Z85230 SCC Register Addresses

SCC	SCC Register	Address
SCC #1	Port B Control	$FFF45001
	Port B Data	$FFF45003
	Port A Control	$FFF45005
	Port A Data	$FFF45007
SCC #2	Port B Control	$FFF45801
	Port B Data	$FFF45803
	Port A Control	$FFF45805
	Port A Data	$FFF45807

Table 3-6. 82596CA Ethernet LAN Memory Map

	Data Bits			
Address	D31	D16	D15	D0
$FFF46000	Upper Command Word		Lower Command Word	
$FFF46004	MPU Channel Attention (CA)			

Notes

1. **Refer to the MPU Port and MPU Channel Attention registers in the *MVME162 Embedded Controller Programmer's Reference Guide*.**
2. **After resetting, you must write the System Configuration Pointer to the command registers before writing to the MPU Channel Attention register. Writes to the System Configuration Pointer must be upper word first, lower word second.**

Table 3-7. 53C710 SCSI Memory Map

53C710 Register Address Map			Base Address is $FFF47000		
Big Endian Mode					**SCRIPTs and Little Endian Mode**
00	SIEN	SDID	SCNTL1	SCNTL0	00
04	SOCL	SODL	SXFER	SCID	04
08	SBCL	SBDL	SIDL	SFBR	08
0C	SSTAT2	SSTAT1	SSTAT0	DSTAT	0C
10	DSA				10
14	CTEST3	CTEST2	CTEST1	CTEST0	14
18	CTEST7	CTEST6	CTEST5	CTEST4	18
1C	TEMP				1C
20	LCRC	CTEST8	ISTAT	DFIFO	20
24	DCMD	DBC			24
28	DNAD				28
2C	DSP				2C
30	DSPS				30
34	SCRATCH				34
38	DCNTL	DWT	DIEN	DMODE	38
3C	ADDER				3C

Note **Accesses may be 8-bit or 32-bit, but not 16-bit.**

IPIC Overall Memory Map

The following memory map table includes all devices selected by the IPIC map decoder.

Table 3-8. IPIC Overall Memory Map

Address Range	Selected Device	Port Width	Size
Programmable	IP_a / IP_ab Memory Space	D32-D8	64 KB-16 MB
Programmable	IP_b Memory Space	D16-D8	64 KB-8 MB
Programmable	IP_c / IP_cd Memory Space	D32-D8	64 KB-16 MB
Programmable	IP_d Memory Space	D16-D8	64 KB-8 MB
$FFF58000-$FFF5807F	IP_a I / O Space	D16	128 B
$FFF58080-$FFF580BF	IP_a ID Space	D16	64 B
$FFF580C0-$FFF580FF	IP_a ID Space Repeated	D16	64 B
$FFF58100-$FFF5817F	IP_b I / O Space	D16	128 B
$FFF58180-$FFF581BF	IP_b ID Space	D16	64 B
$FFF581C0-$FFF581FF	IP_b ID Space Repeated	D16	64 B
$FFF58200-$FFF5827F	IP_c I / O Space	D16	128 B
$FFF58280-$FFF582BF	IP_c ID Space	D16	64 B
$FFF582C0-$FFF582FF	IP_c ID Space Repeated	D16	64 B
$FFF58300-$FFF5837F	IP_d I / O Space	D16	128 B
$FFF58380-$FFF583BF	IP_d ID Space	D16	64 B
$FFF583C0-$FFF583FF	IP_d ID Space Repeated	D16	64 B
$FFF58400-$FFF584FF	IP_ab I / O Space	D32-D16	256 B
$FFF58500-$FFF585FF	IP_cd I / O Space	D32-D16	256 B
$FFF58600-$FFF586FF	IP_ab I / O Space Repeated	D32-D16	256 B
$FFF58700-$FFF587FF	IP_cd I / O Space Repeated	D32-D16	256 B
$FFFBC000-$FFFBC01F	Control / Status Registers	D32-D8	32 B

Table 3-9 contains a summary of the IPIC CSR registers. The CSR registers can be accessed as bytes, words, or longwords; they should not be accessed as lines. They are shown in the table as bytes.

Table 3-9. IPIC Memory Map—Control and Status Registers

IPIC Base Address = $FFFBC000

Register Offset	Register Name	Register Bit Names							
		D7	D6	D5	D4	D3	D2	D1	D0
$00	CHIP ID	0	0	1	0	0	0	1	1
$01	CHIP REVISION	0	0	0	0	0	0	0	0
$02	RESERVED	0	0	0	0	0	0	0	0
$03	RESERVED	0	0	0	0	0	0	0	0
$04	IP_a MEM BASE UPPER	a_BASE31	a_BASE30	a_BASE29	a_BASE28	a_BASE27	a_BASE26	a_BASE25	a_BASE24
$05	IP_a MEM BASE LOWER	a_BASE23	a_BASE22	a_BASE21	a_BASE20	a_BASE19	a_BASE18	a_BASE17	a_BASE16
$06	IP_b MEM BASE UPPER	b_BASE31	b_BASE30	b_BASE29	b_BASE28	b_BASE27	b_BASE26	b_BASE25	b_BASE24
$07	IP_b MEM BASE LOWER	b_BASE23	b_BASE22	b_BASE21	b_BASE20	b_BASE19	b_BASE18	b_BASE17	b_BASE16
$08	IP_c MEM BASE UPPER	c_BASE31	c_BASE30	c_BASE29	c_BASE28	c_BASE27	c_BASE26	c_BASE25	c_BASE24
$09	IP_c MEM BASE LOWER	c_BASE23	c_BASE22	c_BASE21	c_BASE20	c_BASE19	c_BASE18	c_BASE17	c_BASE16
$0A	IP_d MEM BASE UPPER	d_BASE31	d_BASE30	d_BASE29	d_BASE28	d_BASE27	d_BASE26	d_BASE25	d_BASE24
$0B	IP_d MEM BASE LOWER	d_BASE23	d_BASE22	d_BASE21	d_BASE20	d_BASE19	d_BASE18	d_BASE17	d_BASE16
$0C	IP_a MEM SIZE	a_SIZE23	a_SIZE22	a_SIZE21	a_SIZE20	a_SIZE19	a_SIZE18	a_SIZE17	a_SIZE16
$0D	IP_b MEM SIZE	b_SIZE23	b_SIZE22	b_SIZE21	b_SIZE20	b_SIZE19	b_SIZE18	b_SIZE17	b_SIZE16
$0E	IP_c MEM SIZE	c_SIZE23	c_SIZE22	c_SIZE21	c_SIZE20	c_SIZE19	c_SIZE18	c_SIZE17	c_SIZE16
$0F	IP_d MEM SIZE	d_SIZE23	d_SIZE22	d_SIZE21	d_SIZE20	d_SIZE19	d_SIZE18	d_SIZE17	d_SIZE16
$10	IP_a INT0 CONTROL	a0_PLTY	a0_E/L*	a0_INT	a0_IEN	a0_ICLR	a0_IL2	a0_IL1	a0_IL0
$11	IP_a INT1 CONTROL	a1_PLTY	a1_E/L*	a1_INT	a1_IEN	a1_ICLR	a1_IL2	a1_IL1	a1_IL0
$12	IP_b INT0 CONTROL	b0_PLTY	b0_E/L*	b0_INT	b0_IEN	b0_ICLR	b0_IL2	b0_IL1	b0_IL0
$13	IP_b INT1 CONTROL	b1_PLTY	b1_E/L*	b1_INT	b1_IEN	b1_ICLR	b1_IL2	b1_IL1	b1_IL0
$14	IP_c INT0 CONTROL	c0_PLTY	c0_E/L*	c0_INT	c0_IEN	c0_ICLR	c0_IL2	c0_IL1	c0_IL0
$15	IP_c INT1 CONTROL	c1_PLTY	c1_E/L*	c1_INT	c1_IEN	c1_ICLR	c1_IL2	c1_IL1	c1_IL0
$16	IP_d INT0 CONTROL	d0_PLTY	d0_E/L*	d0_INT	d0_IEN	d0_ICLR	d0_IL2	d0_IL1	d0_IL0
$17	IP_d INT1 CONTROL	d1_PLTY	d1_E/L*	d1_INT	d1_IEN	d1_ICLR	d1_IL2	d1_IL1	d1_IL0
$18	IP_a GENERAL CONTROL	a_ERR	0	a_RT1	a_RT0	a_WIDTH1	a_WIDTH0	0	a_MEN
$19	IP_a GENERAL CONTROL	b_ERR	0	b_RT1	b_RT0	b_WIDTH1	b_WIDTH0	0	b_MEN

Table 3-9. IPIC Memory Map—Control and Status Registers (Continued)

IPIC Base Address = $FFFBC000

Register Offset	Register Name	Register Bit Names							
		D7	D6	D5	D4	D3	D2	D1	D0
$1A	IP_b GENERAL CONTROL	c_ERR	0	c_RT1	c_RT0	c_WIDTH1	c_WIDTH0	0	c_MEN
$1B	IP_b GENERAL CONTROL	d_ERR	0	d_RT1	d_RT0	d_WIDTH1	d_WIDTH0	0	d_MEN
$1C	RESERVED	0	0	0	0	0	0	0	0
$1D	RESERVED	0	0	0	0	0	0	0	0
$1E	RESERVED	0	0	0	0	0	0	0	0
$1F	IP RESET	0	0	0	0	0	0	0	RES

Table 3-10. MK48T08 BBRAM/TOD Clock Memory Map

Address Range	Description	Size (Bytes)
$FFFC0000 - $FFFC0FFF	User Area	4096
$FFFC1000 - $FFFC10FF	Networking Area	256
$FFFC1100 - $FFFC16F7	Operating System Area	1528
$FFFC16F8 - $FFFC1EF7	Debugger Area	2048
$FFFC1EF8 - $FFFC1FF7	Configuration Area	256
$FFFC1FF8 - $FFFC1FFF	TOD Clock	8

Table 3-11. BBRAM Configuration Area Memory Map

Address Range	Description	Size (Bytes)
$FFFC1EF8 - $FFFC1EFB	Version	4
$FFFC1EFC - $FFFC1F07	Serial Number	12
$FFFC1F08 - $FFFC1F17	Board ID	16
$FFFC1F18 - $FFFC1F27	PWA	16
$FFFC1F28 - $FFFC1F2B	Speed	4
$FFFC1F2C - $FFFC1F31	Ethernet Address	6
$FFFC1F32 - $FFFC1F33	Reserved	2
$FFFC1F34 - $FFFC1F35	Local SCSI ID	2
$FFFC1F36 - $FFFC1F3D	Memory Mezzanine PWB	8

Table 3-11. BBRAM Configuration Area Memory Map (Continued)

Address Range	Description	Size (Bytes)
$FFFC1F3E - $FFFC1F45	Memory Mezzanine Serial Number	8
$FFFC1F46 - $FFFC1F4D	Serial Port 2 Personality PWB	8
$FFFC1F4E - $FFFC1F55	Serial Port 2 Personality Serial No.	8
$FFFC1F56 - $FFFC1F5D	IP_a Board ID	8
$FFFC1F5E - $FFFC1F65	IP_a Board Serial Number	8
$FFFC1F66 - $FFFC1F6D	IP_a Board PWB	8
$FFFC1F6E - $FFFC1F75	IP_b Board ID	8
$FFFC1F76 - $FFFC1F7D	IP_b Board Serial Number	8
$FFFC1F7E - $FFFC1F85	IP_b Board PWB	8
$FFFC1F86 - $FFFC1F8D	IP_c Board ID	8
$FFFC1F8E - $FFFC1F95	IP_c Board Serial Number	8
$FFFC1F96 - $FFFC1F9D	IP_c Board PWB	8
$FFFC1F9E - $FFFC1FA5	IP_d Board ID	8
$FFFC1FA6 - $FFFC1FAD	IP_d Board Serial Number	8
$FFFC1FAE - $FFFC1FB5	IP_d Board PWB	8
$FFFC1FB6 - $FFFC1FF6	Reserved	65
$FFFC1FF7	Checksum	1

Table 3-12. TOD Clock Memory Map

Address	Data Bits								Function	
	D7	D6	D5	D4	D3	D2	D1	D0		
$FFFC1FF8	W	R	S	--	--	--	--	--	CONTROL	
$FFFC1FF9	ST	--	--	--	--	--	--	--	SECONDS	00
$FFFC1FFA	x	--	--	--	--	--	--	--	MINUTES	00
$FFFC1FFB	x	x	--	--	--	--	--	--	HOUR	00
$FFFC1FFC	x	FT	x	x	x	--	--	--	DAY	01
$FFFC1FFD	x	x	--	--	--	--	--	--	DATE	01
$FFFC1FFE	x	x	x	--	--	--	--	--	MONTH	01
$FFFC1FFF	--	--	--	--	--	--	--	--	YEAR	00

Note

W = Write Bit **R = Read Bit** **S = Signbit**
ST = Stop Bit **FT = Frequency Test** **x = Unused**

BBRAM, TOD Clock Memory Map

The MK48T08 BBRAM (also called Non-Volatile RAM or NVRAM) is divided into six areas as shown in Table 3-10. The first five areas are defined by software, while the sixth area, the time-of-day (TOD) clock, is defined by the chip hardware. The first area is reserved for user data. The second area is used by Motorola networking software. The third area is used by the operating system. The fourth area is used by the MVME162 board debugger (MVME162Bug). The fifth area, detailed in Table 3-11, is the configuration area. The sixth area, the TOD clock, detailed in Table 3-12, is defined by the chip hardware.

The data structure of the configuration bytes starts at $FFFC1EF8 and is as follows.

```
struct brdi_cnfg {
       char        version[4];
       char        serial[12];
       char        id[16];
       char        pwa[16];
       char        speed[4];
       char        ethernet[6];
       char        fill[2];
       char        lscsiid[2];
       char        mem_pwb[8];
       char        mem_serial[8];
       char        port2_pwb[8];
       char        port2_serial[8];
       char        ipa_brdid[8];
       char        ipa_serial[8];
       char        ipa_pwb[8];
       char        ipb_brdid[8];
       char        ipb_serial[8];
       char        ipb_pwb[8];
       char        ipc_brdid[8];
       char        ipc_serial[8];
       char        ipc_pwb[8];
       char        ipd_brdid[8];
       char        ipd_serial[8];
       char        ipd_pwb[8];
       char        reserved[65];
       char        cksum[1];
       }
```

The fields are defined as follows:

1. Four bytes are reserved for the revision or version of this structure. This revision is stored in ASCII format, with the first two bytes being the major version numbers and the last two bytes being the minor version numbers. For example, if the version of this structure is 1.0, this field contains:

   `0100`

2. Twelve bytes are reserved for the serial number of the board in ASCII format. For example, this field could contain:

   `000000470476`

3. Sixteen bytes are reserved for the board ID in ASCII format. For example, for an MVME162 board with MC68040, SCSI, Ethernet, 4MB DRAM, and 512KB SRAM, this field contains:

   `MVME162-23` (The 10 characters are followed by six blanks.)

4. Sixteen bytes are reserved for the printed wiring assembly (PWA) number assigned to this board in ASCII format. This includes the `01-W` prefix. This is for the main logic board if more than one board is required for a set. Additional boards in a set are defined by a structure for that set. For example, for an MVME162 board with MC68040, SCSI, Ethernet, 4MB DRAM, and 512KB SRAM, at revision A, the PWA field contains:

   `01-W3814B01A` (The 12 characters are followed by four blanks.)

5. Four bytes contain the speed of the board in MHz. The first two bytes are the whole number of MHz and the second two bytes are fractions of MHz. For example, for a 25.00 MHz board, this field contains:

   `2500`

6. Six bytes are reserved for the Ethernet address. The address is stored in hexadecimal format. (Refer to the detailed description in Chapter 4.) If the board does not support Ethernet, this field is filled with zeros.

7. These two bytes are reserved.

8. Two bytes are reserved for the local SCSI ID. The SCSI ID is stored in ASCII format.

9. Eight bytes are reserved for the printed wiring board (PWB) number assigned to the memory mezzanine board in ASCII format. This does *not* include the `01-W` prefix. For example, for a 4MB parity mezzanine at revision A, the PWB field contains:

   `3837B02A`

10. Eight bytes are reserved for the serial number assigned to the memory mezzanine board in ASCII format.

11. Eight bytes are reserved for the printed wiring board (PWB) number assigned to the serial port 2 personality board in ASCII format.
12. Eight bytes are reserved for the serial number assigned to the serial port 2 personality board in ASCII format.
13. Eight bytes are reserved for the board identifier, in ASCII format, assigned to the optional first IndustryPack a.
14. Eight bytes are reserved for the serial number, in ASCII format, assigned to the optional first IndustryPack a.
15. Eight bytes are reserved for the printed wiring board (PWB) number assigned to the optional first IndustryPack a.
16. Eight bytes are reserved for the board identifier, in ASCII format, assigned to the optional second IndustryPack b.
17. Eight bytes are reserved for the serial number, in ASCII format, assigned to the optional second IndustryPack b.
18. Eight bytes are reserved for the printed wiring board (PWB) number assigned to the optional second IndustryPack b.
19. Eight bytes are reserved for the board identifier, in ASCII format, assigned to the optional third IndustryPack c.
20. Eight bytes are reserved for the serial number, in ASCII format, assigned to the optional third IndustryPack c.
21. Eight bytes are reserved for the printed wiring board (PWB) number assigned to the optional third IndustryPack c.
22. Eight bytes are reserved for the board identifier, in ASCII format, assigned to the optional fourth IndustryPack d.
23. Eight bytes are reserved for the serial number, in ASCII format, assigned to the optional fourth IndustryPack d.
24. Eight bytes are reserved for the printed wiring board (PWB) number assigned to the optional fourth IndustryPack d.
25. Growth space (65 bytes) is reserved. This pads the structure to an even 256 bytes.
26. The final one byte of the area is reserved for a checksum (as defined in the *MVME162Bug Debugging Package User's Manual*) for security and data integrity of the configuration area of the NVRAM. This data is stored in hexadecimal format.

Interrupt Acknowledge Map

The local bus distinguishes interrupt acknowledge cycles from other cycles by placing the binary value %11 on TT1-TT0. It also specifies the level that is being acknowledged using TM2-TM0. The interrupt handler selects which device within that level is being acknowledged.

VMEbus Memory Map

This section describes the mapping of local resources as viewed by VMEbus masters.

VMEbus Accesses to the Local Bus

The VMEchip2 includes a user-programmable map decoder for the VMEbus-to-local-bus interface. The map decoder allows you to program the starting and ending address and the modifiers the MVME162 responds to.

VMEbus Short I/O Memory Map

The VMEchip2 includes a user-programmable map decoder for the GCSR. The GCSR map decoder allows you to program the starting address of the GCSR in the VMEbus short I/O space.

Software Initialization

Most functions that have been done with switches or jumpers on other modules are done by setting control registers on the MVME162. At powerup or reset, the EPROMs that contain the 162Bug debugging package set up the default values of many of these registers.

Specific programming details may be determined by study of the *M68040 Microprocessor User's Manual*. Then check the details of all the MVME162 onboard registers as given in the *MVME162 Embedded Controller Programmer's Reference Guide*.

Multi-MPU Programming Considerations

Good programming practice dictates that only one MPU at a time have control of the MVME162 control registers. Of particular note are:

- ❑ Registers that modify the address map
- ❑ Registers that require two cycles to access
- ❑ VMEbus interrupt request registers

Local Reset Operation

Local reset (LRST) is a subset of system reset (SRST). Local reset can be generated five ways:

- ❏ Expiration of the watchdog timer
- ❏ Pressing the front panel RESET switch (if the system controller function is disabled)
- ❏ By asserting a bit in the board control register in the GCSR
- ❏ By SYSRESET*
- ❏ By powerup reset.

Note **The GCSR allows a VMEbus master to reset the local bus. This feature is very dangerous and should be used with caution. The local reset feature is a partial system reset, not a complete system reset such as powerup reset or SYSRESET*. When the local bus reset signal is asserted, a local bus cycle may be aborted. The VMEchip2 is connected to both the local bus and the VMEbus and if the aborted cycle is bound for the VMEbus, erratic operation may result. Communications between the local processor and a VMEbus master should use interrupts or mailbox locations; reset should not be used in normal communications. Reset should be used only when the local processor is halted or the local bus is hung and reset is the last resort.**

Any VMEbus access to the MVME162 while it is in the reset state is ignored. If a global bus timer is enabled, a bus error is generated.

FUNCTIONAL DESCRIPTION 4

Introduction

This chapter describes the MVME162 Embedded Controller on a block diagram level. The *Functional Description* provides an overview of the MVME162, followed by a detailed description of several blocks of MVME162 circuitry. Figure 4-1 shows a block diagram of the MVME162 main module. Figure 4-2 shows a block diagram of the parity DRAM mezzanine module.

Descriptions of other MVME162 blocks, including programmable registers in the ASICs and peripheral chips, are given in the *MVME162 Embedded Controller Programmer's Reference Guide*. Refer to it for the rest of the functional description of the MVME162.

MVME162 Functional Description

The MVME162 is a high-functionality VMEbus single board computer designed around the MC68040/MC68LC040 chip. It has 1MB, 4MB, or 8MB of DRAM, 512KB of SRAM, 1MB Flash memory, four MVIP IndustryPack interfaces, and two serial ports (one EIA-232-D DCE; one EIA-232-D or EIA-530 DCE/DTE). Options include an SCSI mass storage interface, a LAN Ethernet transceiver interface, and a non-VMEbus version.

Data Bus Structure

The local data bus on the MVME162 is a 32-bit synchronous bus that is based on the MC68040 bus, and which supports burst transfers and snooping. The various local bus master and slave devices use the local bus to communicate. The local bus is arbitrated by priority type arbiter and the priority of the local bus masters from highest to lowest is: 82596CA LAN, NCR 53C710 SCSI, VMEbus, and MPU. Generally speaking, any master can access any slave; however, not all combinations pass the common sense test. Refer to the *MVME162 Embedded Controller Programmer's Reference Guide* and to the user's guide for each device to determine its port size, data bus connection, and any restrictions that apply when accessing the device.

MC68040/MC68LC040 MPU

The MVME162 is equipped with an MC68040 or MC68LC040 microprocessor. The MC68040 / MC68LC040 have on-chip instruction and data caches; the MC68040 also provides a floating-point coprocessor. Refer to the *M68040 Microprocessor User's Manual* for more information.

EPROM and Flash Memory

The MVME162 implementation includes four 2-Mbit Flash devices organized in a 256Kbit x 8 configuration. The EPROM location is a standard JEDEC 32-pin PLCC capable of 4 Mbit densities (128 Kbit x 8; 256 Kbit X 8; 512 Kbit x 8; 1 Mbit x8) organized as a 512Kbit x 8 device. A jumper setting (GPIO3, pins 9-10 on J22) allows reset code to be fetched either from Flash memory (GPIO3 installed) or from the EPROM (GPIO3 removed).

SRAM

The MVME162 provides 512KB of 32-bit-wide onboard static RAM in a single non-interleaved architecture with onboard battery backup. The worst case elapsed time for battery protection is 200 days. Specifics on SRAM performance can be found in the section on the SRAM Memory Controller in the MCchip Programming Model in the *MVME162 Embedded Controller Programmer's Reference Guide*. The SRAM arrays are not parity protected.

The battery backup function for the MVME162 SRAM is provided by a Dallas DS1210S device that supports primary and secondary power sources. In the event of a main board power failure, the DS1210S checks power sources and switches to the source with the higher voltage.

If the voltage of the backup source is lower than two volts, the DS1210S blocks the second memory cycle; this allows software to provide an early warning to avoid data loss. Because the second access may be blocked during a power failure, software should do at least two accesses before relying on the data.

The MVME162 provides jumpers (on J20) that allow either power source of the DS1210S to be connected to the VMEbus +5V STDBY pin or to one cell of the onboard battery. For example, the primary system backup source may be a battery connected to the VMEbus +5V STDBY pin and the secondary source may be the onboard battery. If the system source should fail or the board is removed from the chassis, the onboard battery takes over.

Caution **For proper operation of the onboard SRAM, some jumper combination must be installed on the Backup Power Source Select Header. If one of the jumpers is used to select the battery, the battery must be installed on the MVME162. The SRAM may malfunction if inputs to the DS1210S are left unconnected.**

The SRAM is controlled by the MCchip, and the access time is programmable. Refer to the MCchip description in the *MVME162 Embedded Controller Programmer's Reference Guide* for more detail.

About the Battery

The power source for the onboard SRAM is a RAYOVAC FB1225 battery with two BR1225 type lithium cells, socketed for easy removal and replacement. A small capacitor is provided so that the batteries can be quickly replaced without data loss.

The lifetime of the battery is very dependent on the ambient temperature of the board and the power-on duty cycle. The lithium battery supplied on the MVME162 should provide at least two years of backup time with the board powered off and with an ambient temperature of 40° C. If the power-on duty cycle is 50% (the board is powered on half of the time), the battery lifetime is four years. At lower ambient temperatures the backup time is significantly longer and may approach the shelf life of the battery.

When a board is stored, the battery should be disconnected to prolong battery life. This is especially important at high ambient temperatures. The MVME162 is shipped with the battery disconnected (i.e., with VMEbus +5V standby voltage selected as both primary and secondary power source). If you intend to use the battery as a power source, whether primary or secondary, it is necessary to reconfigure the jumpers on J20 before installing the module. Refer to *SRAM Backup Power Source Select Header J20* in Chapter 2 for available jumper configurations.

The power leads from the battery are exposed on the solder side of the board. The board should not be placed on a conductive surface or stored in a conductive bag unless the battery is removed.

Caution **Lithium batteries incorporate flammable materials such as lithium and organic solvents. If lithium batteries are mistreated or handled incorrectly, they may burst open and ignite, possible resulting in injury and/or fire.**

When dealing with lithium batteries, carefully follow the precautions listed below in order to prevent accidents.

- ❏ Do not short-circuit.
- ❏ Do not disassemble, deform, or apply excessive pressure.
- ❏ Do not heat or incinerate.
- ❏ Do not apply solder directly.
- ❏ Do not use different models, or mix new and old batteries together.
- ❏ Do not charge.
- ❏ Always check proper polarity.

To remove the battery from the module, carefully pull the battery from the socket.

Before installing a new battery, ensure that the battery pins are clean. Note the battery polarity and press the battery into the socket. When the battery is in the socket, no soldering is required.

Onboard DRAM

The MVME162 offers a 1MB, a 4MB, and an 8MB DRAM option. The DRAM architecture is non-interleaved for 1MB and interleaved for 4MB and 8MB. Parity protection can be enabled with interrupts or bus exception when a parity error is detected. DRAM performance is specified in the section on the DRAM Memory Controller in the MCchip Programming Model in the *MVME162 Embedded Controller Programmer's Reference Guide*.

The DRAM map decoder can be programmed to accommodate different base address(es) and sizes of mezzanine boards. The onboard DRAM is disabled by a local bus reset and must be programmed before the DRAM can be accessed. Refer to the MCchip description in the *MVME162 Embedded Controller Programmer's Reference Guide* for detailed programming information.

Most DRAM devices require some number of access cycles before the DRAMs are fully operational. Normally this requirement is met by the onboard refresh circuitry and normal DRAM initialization. However, software should insure that a minimum of 10 initialization cycles are performed to each bank of RAM.

Battery Backed Up RAM and Clock

An MK48T08 RAM and clock chip is used on the MVME162. This chip provides a time-of-day clock, oscillator, crystal, power fail detection, memory write protection, 8KB of RAM, and a battery in one 28-pin package. The clock provides seconds, minutes, hours, day, date, month, and year in BCD 24-hour format. Corrections for 28-, 29- (leap year), and 30-day months are automatically made. No interrupts are generated by the clock. Although the MK48T08 is an 8- bit device, the interface furnished by the MCchip supports 8-, 16-, and 32-bit accesses to the MK48T08. Refer to the MCchip description in Chapter 3 and to the MK48T08 data sheet for detailed programming and battery life information.

VMEbus Interface and VMEchip2

The optional VMEchip2 provides the local-bus-to-VMEbus and VMEbus-to-local-bus interfaces. The VMEchip2 can also provide the VMEbus system controller functions. Refer to the *MVME162 Embedded Controller Programmer's Reference Guide* for detailed programming information. Refer to the *MVME162 Embedded Controller Support Information* manual for the pin assignments of VMEbus backplane connectors P1 and P2.

Note that the ABORT switch logic in the VMEchip2 is not used. The GPI inputs to the VMEchip2 which are located at $FFF40088 bits 7-0 are not used. The ABORT switch interrupt is integrated into the MCchip ASIC at location $FFF42043. The GPI inputs are integrated into the MCchip ASIC at location $FFF4202C, bits 23-16.

I/O Interfaces

The MVME162 provides onboard I/O for many system applications. The I/O functions include serial ports, IndustryPack (IP) interfaces, and optional interfaces for LAN Ethernet transceivers and SCSI mass storage devices.

Serial Communications Interface

The MVME162 uses a Zilog Z85230 serial port controller to implement the two serial communications interfaces. Each interface supports CTS, DCD, RTS, and DTR control signals as well as the TxD and RxD transmit/receive data signals, and TxC/RxC synchronous clock signals. The Z85230 supports synchronous (SDLC/HDLC) and asynchronous protocols. The MVME162 hardware supports asynchronous serial baud rates of 110B/s to 38.4KB/s.

The Z85230 supplies an interrupt vector during interrupt acknowledge cycles. The vector is modified within the Z85230 according to the interrupt source. Interrupt request levels are programmed via the MCchip. Refer to the Z85230 data sheet listed in Chapter 1 and to the MCchip Programming Model in the *MVME162 Embedded Controller Programmer's Reference Guide* for further information.

MVME162 Serial Port 1

Port A of the Z85230 is interfaced as EIA-232-D DCE (data circuit-terminating equipment) and is routed to the 25-pin DB25 connector marked SERIAL PORT 1/CONSOLE on the MVME162 front panel. Port A is also routed to a DB9 / RJ11 (on the MVME712*x*) or DB25 (on the MVME712M) connector on the MVME712 series transition module. It is identified there as Port 2.

Although both ports are connected to the same Z85230 Port A, there are several differences between them:

- On the MVME162 front panel, Port 1 can be connected to the TxC and RxC clock signals which may be present on the DB25 connector. These connections are made via header J11 on the MVME162 board (see Figures 2-3 and 2-4 in Chapter 2). The TxC and RxC clocks are not available at Port 2 on the MVME712 series transition modules.
- On MVME712*x* transition modules, Port 2 can be routed either through a DB9 DTE serial interface or (if the module is so equipped[1]) through the onboard modem and its standard RJ11 (Telco) jack. These connections are made via jumper headers J16 and J17 on the MVME712*x*.
- On MVME712M transition modules, Port 2 can be configured as either a DCE or a DTE serial port via jumper headers J16 and J17 on the MVME712M.

Figures 2-3 (sheets 1 and 2) and 2-4 (sheets 1 and 2) in Chapter 2 illustrate the configurations available for Port A.

MVME162 Serial Port 2

Port B of the Z85230 is configured via a serial interface module which is installed at connector J10 on the MVME162 board. Four serial interface modules are available:

- SIM05 and SIM06 (EIA-232-D DTE and DCE respectively)
- SIM07 and SIM08 (EIA-530 DTE and DCE respectively)

1. The MVME712AM and MVME712-13 are equipped with a modem.

Port B is routed (via the module at J10) to the 25-pin DB25 connector marked SERIAL PORT 2 on the MVME162 front panel. Port B is also routed to a DB9 (on the MVME712*x*) or DB25 (on the MVME712M) connector on the MVME712 series transition module. It is identified there as Port 4.

Although both ports are connected to the same Z85230 Port B, there are several considerations to keep in mind:

- On the MVME162 front panel, Port 2 can be connected to the TxC and RxC clock signals which may be present on the DB25 connector. These connections are made via header J12 on the MVME162 board (see Figures 2-3, 2-4, and 2-5 in Chapter 2). The TxC and RxC clock lines are also available at Port 4 on MVME712M transition modules.
- On MVME712*x* transition modules, Port 4 is hard-wired as an EIA-232-D DB9 DTE serial port. A ''null modem'' cable is necessary to use it as a DCE port.
- On MVME712M transition modules, Port 4 can be configured as either a DTE or DCE EIA-232-D serial port via jumper headers J19 and J18 on the MVME712M. Port 4 can also be connected to the TxC and RxC clock signals which may be present on the DB25 connector. These connections are made via header J15 on the MVME712M (see Figure 2-3, sheets 3-6 in Chapter 2).
- When Port B is configured as an EIA-530 interface, EIA-530 data transfers normally occur through serial port 2 on the MVME162 front panel. The MVME712 series transition module should be disconnected from the MVME162.

  Although the signals are present at P2 (see Figure 2-5), the EIA-530 standard calls for a DB25 connector and balanced (not single-ended) lines; these are not supported by the P2 adapter and MVME712 series transition modules. System integrators who wish to use the EIA-530 signals at P2 must provide the appropriate connections.

Figure 2-3 (sheets 3-6), Figure 2-4 (sheets 3-4), and Figure 2-5 in Chapter 2 illustrate the factory configurations available for Port B. Note that the port configurations shown in Figure 2-3, sheets 5 and 6 are not recommended for synchronous applications because of the incorrect clock direction.

Caution **Do not connect serial data devices to the equivalent ports on the MVME712 series transition module and the MVME162 front panel at the same time. This could result in simultaneous transmission of conflicting data.**

Do not connect peripheral devices to Port 1, Port 3, or the Centronics printer port on the MVME712 series transition module. In the EIA-232-D case, none of these ports are connected to any MVME162 circuits. In the EIA-530 case, attempting to use these ports would produce certain connections with the potential to damage the MVME162 or the peripherals.

IndustryPack (IP) Interfaces

The IPIC ASIC on the MVME162 supports four IndustryPack (IP) interfaces; these are accessible from the front panel. Refer to the IPIC Programming Model in the *MVME162 Embedded Controller Programmer's Reference Guide* for details of the IP interface. Refer to the *MVME162 Embedded Controller Support Information* manual for the pin assignments of the IP connectors.

Ethernet Interface

The Intel 82596CA LAN controller is used to implement the Ethernet transceiver interface. The 82596CA accesses local RAM using DMA operations to perform its normal functions. Because the 82596CA has small internal buffers and the VMEbus has an undefined latency period, buffer overrun may occur if the DMA is programmed to access the VMEbus. Therefore, the 82596CA should not be programmed to access the VMEbus.

Every MVME162 is assigned an Ethernet station address. The address is $08003E2*xxxxx*, where *xxxxx* is the unique 5-nibble number assigned to the board (i.e., every MVME162 has a different value for *xxxxx*).

Each MVME162 has an Ethernet station address displayed on a label attached to backplane connector P2. In addition, the six bytes including the Ethernet station address are stored in the BBRAM configuration area. That is, 08003E2*xxxxx* is stored in the BBRAM. At an address of $FFFC1F2C, the upper four bytes (08003E2*x*) can be read. At an address of $FFFC1F30, the lower two bytes (*xxxx*) can be read. Refer to the BBRAM/TOD Clock memory map description in Chapter 3. The MVME162 debugger has the capability to retrieve or set the Ethernet station address.

If the data in the BBRAM is lost, use the number on the label on backplane connector P2 to restore it.

The Ethernet transceiver interface is located on the MVME162 main module. An industry-standard DB15 connector is located on the MVME712 series transition module.

The MCchip provides support functions for the 82596CA. Refer to the 82596CA user's guide and to the *MVME162 Embedded Controller Programmer's Reference Guide* for detailed programming information. Refer to the *MVME712-12, MVME712-13, MVME712A, MVME712AM, and MVME712B Transition Modules and LCP2 Adapter Board User's Manual* or the *MVME712M Transition Module and P2 Adapter Board User's Manual* for the pin assignments of the transition module Ethernet connectors.

SCSI Interface

The MVME162 supports mass storage subsystems through the industry-standard SCSI bus. These subsystems may include hard and floppy disk drives, streaming tape drives, and other mass storage devices. The SCSI interface is implemented using the NCR 53C710 SCSI I/O controller.

Support functions for the NCR 53C710 are provided by the MCchip. Refer to the NCR 53C710 user's guide and to the *MVME162 Embedded Controller Programmer's Reference Guide* for detailed programming information. Refer to the *MVME712-12, MVME712-13, MVME712A, MVME712AM, and MVME712B Transition Modules and LCP2 Adapter Board User's Manual* or to the *MVME712M Transition Module and P2 Adapter Board User's Manual* for the pin assignments of the transition module SCSI connectors.

SCSI Termination

The individual configuring the system must ensure that the SCSI bus is properly terminated at both ends.

The MVME162 provides sockets for SCSI bus terminators on the P2 adapter board or the LCP2 adapter board. If the SCSI bus ends at the adapter board, then termination resistors must be installed on the adapter board. +5V power to the SCSI bus TERMPWR signal and termination resistors is provided through a fuse located on the adapter board.

Local Resources

The MVME162 includes many resources for the local processor. These include tick timers, software programmable hardware interrupts, watchdog timer, and local bus timeout.

Programmable Tick Timers

Four 32-bit programmable tick timers with 1 µs resolution are provided in the MCchip and two 32-bit programmable tick timers are provided in the optional VMEchip2. The tick timers can be programmed to generate periodic interrupts to the processor. Refer to the MCchip and VMEchip2 descriptions in the *MVME162 Embedded Controller Programmer's Reference Guide* for detailed programming information.

Watchdog Timer

A watchdog timer is provided in both the MCchip and the optional VMEchip2. The timers operate independently but in parallel. When the watchdog timers are enabled, they must be reset by software within the programmed time or they will time out. The watchdog timers can be programmed to generate a SYSRESET signal, local reset signal, or board fail signal if they time out. Refer to the VMEchip2 and MCchip descriptions in the *MVME162 Embedded Controller Programmer's Reference Guide* for detailed programming information.

Software-Programmable Hardware Interrupts

Eight software-programmable hardware interrupts are provided by the VMEchip2. These interrupts allow software to create a hardware interrupt. Refer to the VMEchip2 desciption in the *MVME162 Embedded Controller Programmer's Reference Guide* for detailed programming information.

Local Bus Timeout

The MVME162 provides timeout functions in the VMEchip2 and the MCchip for the local bus. When the timer is enabled and a local bus access times out, a Transfer Error Acknowledge (TEA) signal is sent to the local bus master. The timeout value is selectable by software for 8 µsec, 64 µsec, 256 µsec, or infinity. The local bus timer does not operate during VMEbus bound cycles. VMEbus bound cycles are timed by the VMEbus access timer and the VMEbus global timer. Refer to the VMEchip2 and MCchip descriptions in the *MVME162 Embedded Controller Programmer's Reference Guide* for detailed programming information.

The MCchip also provides local bus timeout logic for MVME162s without the optional VMEbus interface (i.e., without the VMEchip2).

Timing Performance

This section provides performance information for the MVME162. The MVME162 is designed to operate at 25 MHz.

Local Bus to DRAM Cycle Times

The DRAM base address, array size, and device size are programmable. The DRAM controller assumes an interleaved architecture if the DRAM size requires eight physical devices (that is, when memory array size is 4MB and DRAM technology is 4 Mbits per device; or when memory array size is 16MB and DRAM technology is 16 Mbits per device.)

Parity checking and parity exception action is also programmable. The DRAM array size and device size are initialized in the DRAM Space Size Register.

Table 4-1. DRAM Performance

Clock Budget	Operating Conditions
4,2,2,2	Non-interleaved, read, 25 MHz, without TEA on parity error
4,1,1,1	Interleaved, read, 25 MHz, without TEA on parity error
5,3,3,3	Non-interleaved, read, 25 MHz, with TEA on parity error
5,2,2,2	Interleaved, read, 25 MHz, with TEA on parity error
3,2,2,2	Write, 25 MHz
5,3,3,3	Non-interleaved, read, 33 MHz, without TEA on parity error
5,2,2,2	Interleaved, read, 33 MHz, without TEA on parity error
6,4,4,4	Non-interleaved, read, 33 MHz, with TEA on parity error
6,3,3,3	Interleaved, read, 33 MHz, with TEA on parity error
4,2,2,2	Write, 33 MHz

Note **TEA is the MC68040 bus error transaction signal. "With TEA" indicates that a bus error cycle occurs if a DRAM parity error was detected.**

EPROM/Flash Cycle Times

The EPROM / Flash cycle time is programmable from 3 to 10 bus clocks / byte (4 bytes = 12 to 40). (The actual cycle time may vary depending on the device speed.) The data transfers are 32 bits wide. Refer to the *MVME162 Embedded Controller Programmer's Reference Guide*.

SCSI Transfers

The MVME162 includes an SCSI mass storage bus interface with DMA controller. The SCSI DMA controller uses a FIFO buffer to interface the 8-bit SCSI bus to the 32-bit local bus. The FIFO buffer allows the SCSI DMA controller to efficiently transfer data to the local bus in four longword bursts.

This reduces local bus usage by the SCSI device. Refer to the MCchip Programming Model in the *MVME162 Embedded Controller Programmer's Reference Guide*.

The transfer rate of the DMA controller is 44MB/sec at 25 MHz with parity off and interleaved DRAM and read cycles. Assuming a continuous transfer rate of 5MB/sec on the SCSI bus, 12% of the local bus bandwidth is used by transfers from the SCSI bus.

LAN DMA Transfers

The MVME162 includes a LAN interface with DMA controller. The LAN DMA controller uses a FIFO buffer to interface the serial LAN bus to the 32-bit local bus. The FIFO buffer allows the LAN DMA controller to efficiently transfer data to the local bus.

The 82596CA does not execute MC68040 compatible burst cycles, therefore the LAN DMA controller does not use burst transfers. Parity DRAM write cycles require 3 clock cycles, and read cycles require 5 clock cycles with parity off and 6 clock cycles with parity on.

The transfer rate of the LAN DMA controller is 20MB/sec at 25 MHz with parity off. Assuming a continuous transfer rate of 1MB/sec on the LAN bus, 5% of the local bus bandwidth is used by transfers from the LAN bus.

Remote Status and Control

The remote status and control connector, J4, is a 20-pin connector located behind the front panel of the MVME162. It provides system designers with flexibility in accessing critical indicator and reset functions. This allows a system designer to construct a RESET/ABORT/LED panel that can be located remotely from the MVME162.

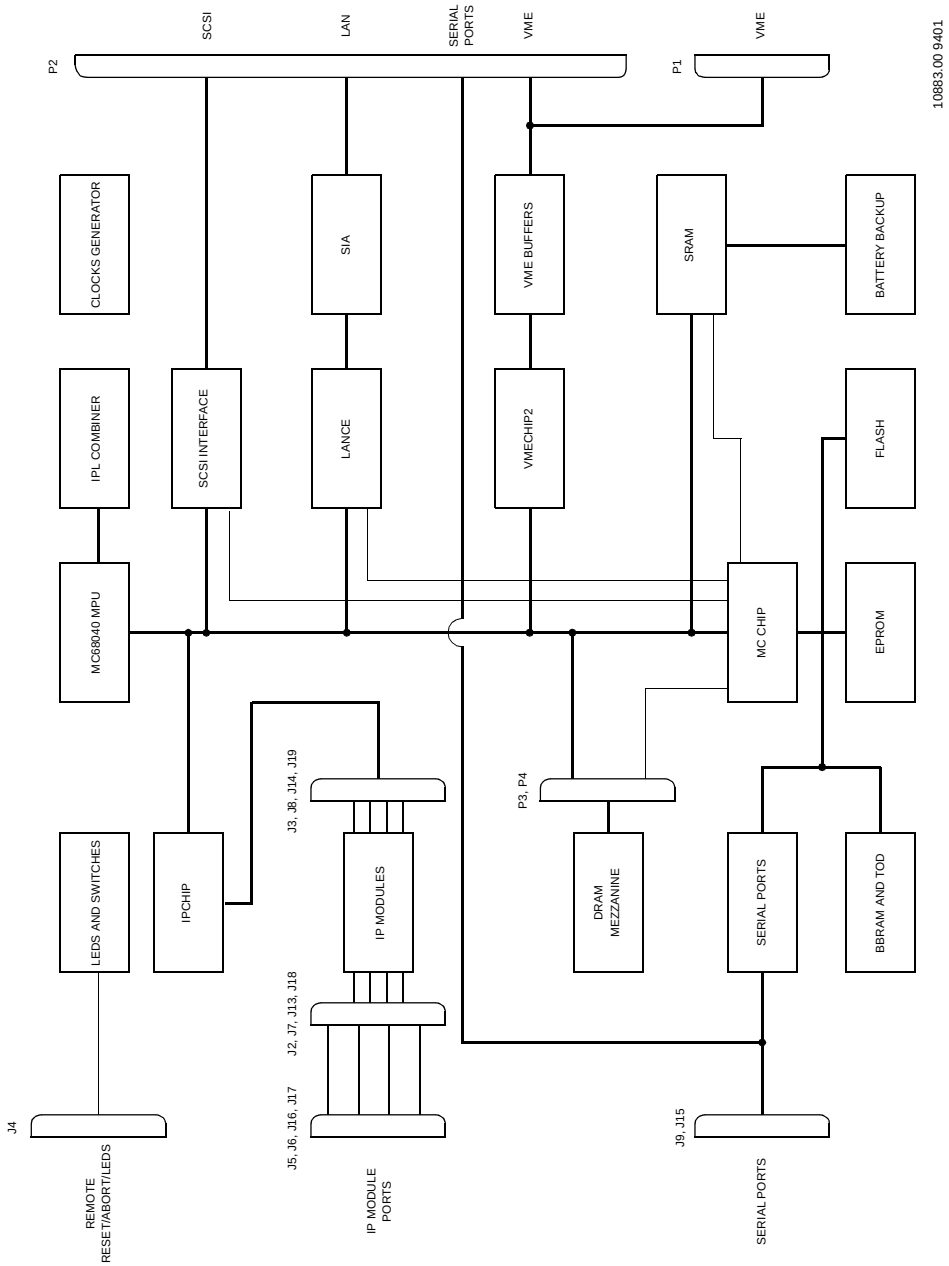
P2
SCSI
LAN
SERIAL PORTS
VME
P1
VME
10883.00 9401
CLOCKS GENERATOR
SIA
VME BUFFERS
SRAM
BATTERY BACKUP
IPL COMBINER
SCSI INTERFACE
LANCE
VMECHIP2
FLASH
MC68040 MPU
MC CHIP
EPROM
J3, J8, J14, J19
P3, P4
LEDS AND SWITCHES
IPCHIP
IP MODULES
DRAM MEZZANINE
SERIAL PORTS
BBRAM AND TOD
J2, J7, J13, J18
J4
J5, J6, J16, J17
J9, J15
REMOTE RESET/ABORT/LEDS
IP MODULE PORTS
SERIAL PORTS

Figure 4-1. MVME162 Main Module Block Diagram

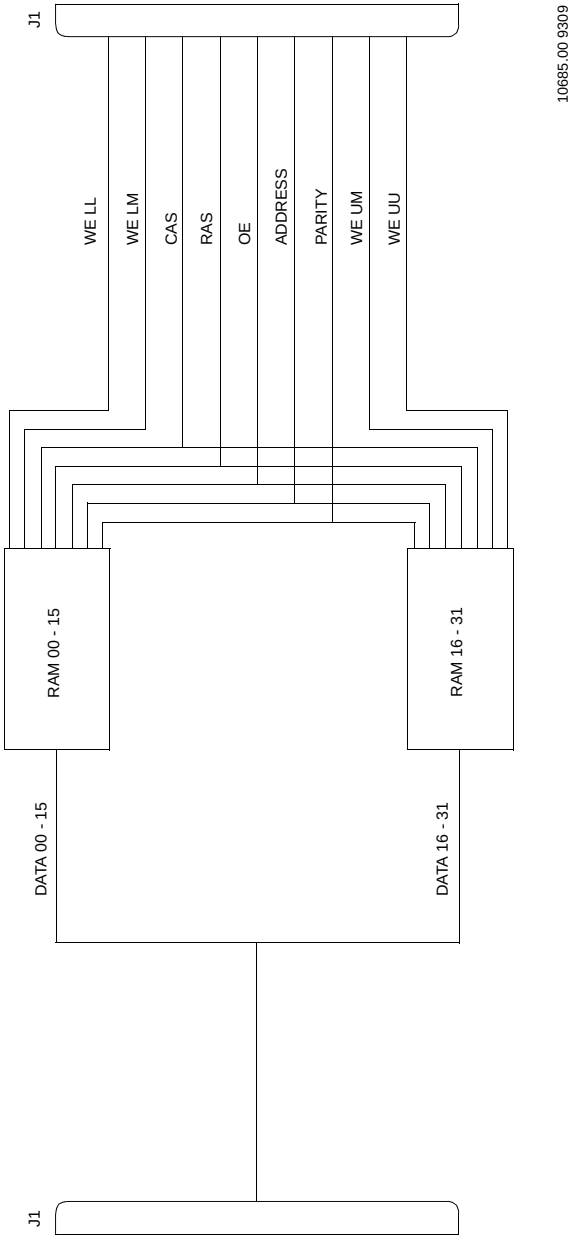
J1
10685.00 9309
WE LL
WE LM
CAS
RAS
OE
ADDRESS
PARITY
WE UM
WE UU
RAM 00 - 15
RAM 16 - 31
DATA 00 - 15
DATA 16 - 31
J1

Figure 4-2. Parity DRAM Mezzanine Module Block Diagram

SERIAL INTERCONNECTIONS A

Introduction

As described in previous chapters of this manual, one of the MVME162's two serial ports (port A internally, SERIAL PORT 1/CONSOLE on the front panel) is an EIA-232-D DCE port exclusively. The second port (port B internally, SERIAL PORT 2 on the front panel) can be configured via serial interface modules as an EIA-232-D DCE / DTE or EIA-530 DCE / DTE port.

The MVME162 uses a Zilog Z85230 serial port controller to implement the two serial communications interfaces. Each interface supports CTS, DCD, RTS, and DTR control signals as well as the TxD and RxD transmit / receive data signals, and TxC / RxC synchronous clock signals. The Z85230 supports synchronous (SDLC / HDLC) and asynchronous protocols. The MVME162 hardware supports asynchronous serial baud rates of 110B / sec to 38.4KB / sec.

EIA-232-D Connections

The EIA-232-D standard defines the electrical and mechanical aspects of this serial interface. The interface employs unbalanced (single-ended) signaling and is generally used with DB25 connectors, although other connector styles (e.g., DB9 and RJ45) are sometimes used as well.

Table A-1 lists the standard EIA-232-D interconnections. Not all pins listed in the table are necessary in every application.

To interpret the information correctly, remember that the EIA-232-D serial interface was developed to connect a terminal to a modem. Serial data leaves the sending device on a Transmit Data (TxD) line and arrives at the receiving device on a Receive Data (RxD) line. When computing equipment is interconnected without modems, one of the units must be configured as a terminal (data terminal equipment: DTE) and the other as a modem (data circuit-terminating equipment: DCE). Since computers are normally configured to work with terminals, they are said to be configured as a modem in most cases.

Table A-1. EIA-232-D Interconnections

Pin Number	Signal Mnemonic	Signal Name and Description
1		Not used.
2	TxD	**Transmit Data**. Data to be transmitted; input to modem from terminal.
3	RxD	**Receive Data**. Data which is demodulated from the receive line; output from modem to terminal.
4	RTS	**Request To Send**. Input to modem from terminal when required to transmit a message. With RTS off, the modem carrier remains off. When RTS is turned on, the modem immediately turns on the carrier.
5	CTS	**Clear To Send**. Output from modem to terminal to indicate that message transmission can begin. When a modem is used, CTS follows the off-to-on transition of RTS after a time delay.
6	DSR	**Data Set Ready**. Output from modem to terminal to indicate that the modem is ready to send or receive data.
7	SG	**Signal Ground**. Common return line for all signals at the modem interface.
8	DCD	**Data Carrier Detect**. Output from modem to terminal to indicate that a valid carrier is being received.
9-14		Not used.
15	TxC	**Transmit Clock** (DCE). Output from modem to terminal; clocks data from the terminal to the modem.
16		Not used.
17	RxC	**Receive Clock**. Output from terminal to modem; clocks input data from the terminal to the modem.
18, 19		Not used.
20	DTR	**Data Terminal Ready**. Input to modem from terminal; indicates that the terminal is ready to send or receive data.
21		Not used.
22	RI	**Ring Indicator**. Output from modem to terminal; indicates that an incoming call is present. The terminal causes the modem to answer the phone by carrying DTR true while RI is active..
23		Not used.
24	TxC	**Transmit Clock** (DTE). Input to modem from terminal; same function as TxC on pin 15.
25	BSY	**Busy**. Input to modem from terminal; a positive EIA signal applied to this pin causes the modem to go off-hook and make the associated phone busy.

Notes

1. **A high EIA-232-D signal level is +3 to +15 volts. A low level is -3 to -15 volts. Connecting units in parallel may produce out-of-range voltages and is contrary to specifications.**

2. **The EIA-232-D interface is intended to connect a terminal to a modem. When computers are connected without modems, one computer must be configured as a modem and the other as a terminal.**

Interface Characteristics

The EIA-232-D interface standard specifies all parameters for serial binary data interchange between DTE and DCE devices using unbalanced lines. EIA-232-D transmitter and receiver parameters applicable to the MVME162 are listed in Tables A-2 and A-3.

Table A-2. EIA-232-D Interface Transmitter Characteristics

Parameter	Value Minimum	Value Maximum	Unit
Output voltage (with load resistance of 3000Ω to 7000Ω)	±8.5		V
Open circuit output voltage		±12	V
Short circuit output current (to ground or any other interconnection cable conductor)		±100	mA
Power off output resistance	300		Ω
Output transition time (for a transition region of -3V to +3V and with total load capacitance, including connection cable, of less than 2500pF)		2	µs
Open circuit slew rate		30	V/µs

Table A-3. EIA-232-D Interface Receiver Characteristics

Parameter	Value Minimum	Value Maximum	Unit
Input signal voltage		±25	V
Input high threshold voltage		2.25	V
Input low threshold voltage	0.75		V
Input hysteresis	1.0		V
Input impedance (-15V < V_{in} < +15V)	3000	7000	Ω

The MVME162 conforms to EIA-232-D specifications. Note that although the EIA-232-D standard recommends the use of short interconnection cables not more than 50 feet (15m) in length, longer cables are permissible provided the total load capacitance measured at the interface point and including signal terminator does not exceed 2500pF.

EIA-530 Connections

The EIA-530 interface complements the EIA-232-D interface in function. The EIA-530 standard defines the mechanical aspects of this interface, which is used for transmission of serial binary data, both synchronous and asynchronous. It is adaptable to balanced (double-ended) as well as unbalanced (single-ended) signaling and offers the possibility of higher data rates than EIA-232-D with the same DB25 connector.

Table A-4 lists the EIA-530 interconnections that are available at serial port B (SERIAL PORT 2 on the front panel) when the port is configured via serial interface modules as an EIA-530 DCE or DTE port.

Table A-4. Serial Port B EIA-530 Interconnect Signals

Pin Number	Signal Mnemonic	Signal Name and Description
1		Not used.
2	TxD_A	**Transmit Data (A).** Data to be transmitted; output from DTE to DCE.
3	RxD_A	**Receive Data (A).** Data which is demodulated from the receive line; input from DCE to DTE.

Table A-4. Serial Port B EIA-530 Interconnect Signals (Continued)

Pin Number	Signal Mnemonic	Signal Name and Description
4	RTS_A	**Request to Send (A).** Output from DTE to DCE when required to transmit a message.
5	CTS_A	**Clear to Send (A).** Input to DTE from DCE to indicate that message transmission can begin.
6	DSR_A	**Data Set Ready (A).** Input to DTE from DCE to indicate that the DCE is ready to send or receive data. In DCE configuration, always true.
7	SIG GND	**Signal Ground.** Common return line for all signals.
8	DCD_A	**Data Carrier Detect (A)**. Receive line signal detector output from DCE to DTE to indicate that valid data is being transferred to the DTE on the RxD line.
9	RxC_B	**Receive Signal Element Timing—DCE (B).** Control signal that clocks input data.
10	DCD_B	**Data Carrier Detect (B).** Receive line signal detector output from DCE to DTE to indicate that valid data is being transferred to the DTE on the RxD line.
11	TxCO_B	**Transmit Signal Element Timing—DTE (B).** Control signal that clocks output data.
12	TxC_B	**Transmit Signal Element Timing—DCE (B).** Control signal that clocks input data.
13	CTS_B	**Clear to Send (B).** Input to DTE from DCE to indicate that message transmission can begin.
14	TxD_B	**Transmit Data (B).** Data to be transmitted; output from DTE to DCE.
15	TxC_A	**Transmit Signal Element Timing—DCE (A).** Control signal that clocks input data.
16	RxD_B	**Receive Data (B).** Data which is demodulated from the receive line; input from DCE to DTE.
17	RxC_A	**Receive Signal Element Timing—DCE (A).** Control signal that clocks input data.
18	RTS_B	**Request to Send (B).** Output from DTE to DCE when required to transmit a message.
19	LL_A	**Local Loopback (A).** Reroutes signal within local DCE. In DTE configuration, always tied inactive and driven false. In DCE configuration, ignored
20	DTR_A	**Data Terminal Ready (A).** Output from DTE to DCE indicating that the DTE is ready to send or receive data.
21	RL_A	**Remote Loopback (A).** Reroutes signal within remote DCE. In DTE configuration, always tied inactive and driven false. In DCE configuration, ignored.
22	DSR_B	**Data Set Ready (B).** Input to DTE from DCE to indicate that the DCE is ready to send or receive data. In DCE configuration, always true.

Table A-4. Serial Port B EIA-530 Interconnect Signals (Continued)

Pin Number	Signal Mnemonic	Signal Name and Description
23	DTR_B	**Data Terminal Ready (B).** Output from DTE to DCE indicating that the DTE is ready to send or receive data.
24	TxCO_A	**Transmit Signal Element Timing—DTE (A).** Control signal that clocks output data.
25	TM_A	**Test Mode (A).** Indicates whether the local DCE is under test. In DTE configuration, ignored. In DCE configuration, always tied inactive and driven false.

Interface Characteristics

In specifying parameters for serial binary data interchange between DTE and DCE devices, the EIA-530 standard assumes the use of balanced lines, except for the Remote Loopback, Local Loopback, and Test Mode lines, which are single-ended. Balanced-line data interchange is generally employed in preference to unbalanced-line data interchange where any of the following conditions prevail:

- ❏ The interconnection cable is too long for effective unbalanced operation.
- ❏ The interconnection cable is exposed to extraneous noise sources that may cause an unwanted voltage in excess of ±1V measured differentially between the signal conductor and circuit ground at the load end of the cable, with a 50Ω resistor substituted for the transmitter.
- ❏ It is necessary to minimize interference with other signals.
- ❏ Inversion of signals may be required (e.g., plus polarity MARK to minus polarity MARK may be achieved by inverting the cable pair).

EIA-530 interface transmitter and receiver parameters applicable to the MVME162 are listed in Tables A-5 and A-6.

Table A-5. EIA-530 Interface Transmitter Characteristics

Parameter	Value		Unit
	Minimum	Maximum	
Differential output voltage (absolute, with 100Ω load)	2.0		V
Open circuit differential voltage output (absolute)		6.0	V
Output offset voltage (with 100Ω load)		3.0	V
Short circuit output current (for any voltage between -7V and +7V)		±180	mA
Power off output current (for any voltage between -7V and +7V)		±100	µA
Output transition time (with 100Ω, 15pF load)		15	ns

Table A-6. EIA-530 Interface Receiver Characteristics

Parameter	Value		Unit
	Minimum	Maximum	
Differential input voltage		±12	V
Input offset voltage		±12	V
Differential input high threshold voltage		200	mV
Differential input low threshold voltage		-200	mV
Differential input hysteresis	50		mV
Input impedance (without termination resistors)	10		KΩ

Proper Grounding

An important subject to consider is the use of ground pins. There are two pins labeled GND. Pin 7 is the *signal ground* and must be connected to the distant device to complete the circuit. Pin 1 is the *chassis ground*, but it must be used with care. The chassis is connected to the power ground through the green wire in the power cord and must be connected to be in compliance with the electrical code.

The problem is that when units are connected to different electrical outlets, there may be several volts of difference in ground potential. If pin 1 of each device is interconnected with the others via cable, several amperes of current could result. This condition may not only be dangerous for the small wires in a typical cable, but may also produce electrical noise that causes errors in data transmission. That is why Tables A-1 and A-4 show no connection for pin 1. Normally, pin 7 (*signal ground*) should only be connected to the *chassis ground* at one point; if several terminals are used with one computer, the logical place for that point is at the computer. The terminals should not have a connection between the logic ground return and the chassis.

Index

When using this index, keep in mind that a page number indicates only where referenced material begins. It may extend to the page or pages following the page referenced.

Numerics

162Bug package 1-8

B

backplane jumpers 2-10
battery
    backup 4-2
    precautions 4-4
BBRAM 4-4
    configuration area memory map 3-19
binary number 1-12
board
    configuration 2-1
    layout 2-2
    placement 2-10
    serial number 3-21
bus arbitration 4-1
bus priority levels 4-1

C

configuration area 3-21
control / status register 2-12
cooling requirements 1-4

D

data circuit-terminating equipment (DCE) A-1, 4-6
data terminal equipment (DTE) A-1, 4-6
debugging firmware 1-8
decimal number 1-12
DRAM
    base address 2-12
    options 4-4

E

EIA-232-D
    interconnections A-1
    SIM part numbers 2-4
EIA-530
    interconnections A-4
    interface characteristics 4-7, A-6
    signals A-4
    SIM part numbers 2-4
EPROM
    size selection 2-7
    socket 1-2, 1-7, 4-2
EPROM / Flash selection 2-8
Ethernet
    address 4-8
    interface 1-2, 1-8, 4-8
Ethernet transceiver
    interface 2-13
    power 2-13

F

FCC compliance 1-5
features 1-2, 1-6
firmware 1-8
Flash memory 1-2, 1-7, 2-8, 4-2
floating-point coprocessor 1-6, 4-2
front panel controls 3-1
fuses 2-13

G

GCSR board control register 3-25
general-purpose readable jumpers (J11) 2-8
global bus timeout 2-12

H

hardware interrupts 4-10
hardware preparation 2-1
hexadecimal character 1-12
high-temperature operation 1-4

I

I/O
  connections 1-6
  interfaces 4-5
IndustryPack
  installation 2-9
  interface 1-2, 1-8
installation considerations 2-12
interconnections, serial A-1, A-4
interrupts 4-10
IPIC
  interface 4-8

L

LAN
  interface 1-8, 4-8
LAN FIFO buffer 4-12
LCP2 adapter board 4-9
local bus memory map 3-3, 3-4
local bus priority levels 4-1
local data bus 4-1
Local I/O Devices memory map 3-5
local reset (LRST) 3-1

M

manual terminology 1-12
MCchip 1-7, 2-8, 4-3
memory base addresses 4-11
memory maps 3-3
  53C710 SCSI 3-16
  82596CA Ethernet LAN 3-15
  BBRAM configuration area 3-19
  IPIC control/status 3-18
  IPIC overall 3-17
  local bus 3-4
  local I/O devices 3-5
  MCchip registers 3-14
  MK48T08 BBRAM/TOD clock 3-19
  TOD clock 3-20
  Z85230 SCC registers 3-15
memory options 1-2
MK48T08 RAM/clock chip 4-4
model designations 1-1

N

normal address range 3-3
NVRAM 4-4

O

options 1-2, 1-6, 1-8
  DRAM 4-4

P

P2 adapter board 4-9
part numbers, SIM 2-2, 2-4
port B configuration 2-2
publications 1-10

R

receivers, EIA-232-D A-4
receivers, EIA-530 A-7
remote panel interface 2-13
remote status and control 4-12
required equipment 1-8
RESET switch 3-25
resetting the system 3-1, 3-25
RF emissions 1-5

INDEX

S

SCSI
- FIFO buffer 4-11
- interface 1-2, 1-8, 4-9
- termination 4-9
- terminator power 2-13

serial communications interface 4-5
serial interface modules (SIMs) 2-2
- part numbers 2-4
- port B configuration 4-6
- selection 2-2

serial interface parameters A-3
serial interface signals A-1
serial ports 1-2, 1-6, 1-9, 2-2, A-1
SIM selection 2-2
software 1-9
specifications 1-3
SRAM
- backup 4-2
- backup power selection 2-7

support information 1-11
synchronous
- clock selection 2-6, 4-6
- communications 2-6, 4-6

system controller 2-10
system controller selection (J1) 2-5
system reset (SRST) 3-1, 3-25

T

tick timers 4-9
Time of Day clock 1-2
timeout functions 4-10
timers 1-2
TOD clock memory map 3-20
transition modules 1-6, 1-9, 2-13, 4-6
- installation 2-10
- serial I/O connectors 4-6

transmitters, EIA-232-D A-3
transmitters, EIA-530 A-7

U

user-definable jumpers 2-8

V

VMEbus
- address/data configurations 2-12
- interface 1-2, 1-7, 4-5
- system controller functions 4-5

VMEchip2 1-7

W

watchdog timers 4-10

INDEX